Feasibility Study/Conceptual Plan and
Basis of Design Report

Borough of Seaside Park
Water Distribution and Sanitary Sewer Improvements

Prepared for:

Borough of Seaside Park
Ocean County, New Jersey

Prepared by:

Schoor DePalma, Inc.
Justin Corporate Center
200 Highway Nine, P.O. Box 900
Manalapan, New Jersey 07726

November 2006

Robert D. Forsyth, P.E.
New Jersey Professional Engineer
License Number GE33432
Project No. 06 03661 02

TABLE OF CONTENTS

Appendices

EXECUTIVE SUMMARY

Introduction

The Borough of Seaside Park (Borough) is located on the Barnegat Barrier Island in Ocean County, New Jersey. The Borough was incorporated in 1898 and encompasses a total area of 0.77 square miles. While the year-round population of the Borough is just over 2,200 residents, the population grows to over 20,000 during peak summer months.

The Borough is densely developed, and it is estimated that currently 95-99% of the lots in the Borough are occupied by either a residential or commercial structure. There are no major industrial or manufacturing businesses within the Borough. Since Seaside Park's eastern border contains nearly two miles of shoreline along the Atlantic Ocean, the Borough's main industry is summer tourism.

The Borough owns and operates a potable water transmission/distribution system as well as a sanitary sewer collection/conveyance system which services all of the residents and commercial businesses within the Borough. The majority of the water distribution and sanitary sewer systems were installed between 80 and 100 years ago, and similar to the buried utilities owned and maintained by many of the coastal communities of New Jersey, these systems have exhibited slow degradation and material failure as they approach the end of their useful service lives. This material failure appears to have occurred on a regular (and slightly increasing) pattern over the past few decades.

Over the past several years, numerous discussions concerning the necessary upgrades to the water distribution and sanitary sewer systems have been held. However, the timing, project structure, and overall strategy for the implementation of the required improvements have never been formalized. Recent actions by the New Jersey Department of Transportation (NJDOT) have forced the Borough into the position where immediate action is required. The NJDOT has begun the planning and design phases for drainage improvements and resurfacing of the entire length of the Central Avenue right-of-way (N.J. State Highway 35). The NJDOT anticipates beginning their construction in the spring of 2008. After resurfacing is complete, disturbance of the new pavement for utility construction will not be permitted during a seven (7) year moratorium period.

The deterioration of the water distribution and sanitary sewer systems is imminent and most likely in its final stages. The proposed construction by the NJDOT therefore serves as a springboard for several decisions which must be made promptly by Borough leaders: As Central Avenue serves as the primary corridor through Seaside Park for the water distribution and sanitary sewage collection system, new water distribution and sanitary sewer infrastructure along Central Avenue would represent the "backbone" around which the proposed improvements for the remainder of the Borough would be built. If Central Avenue is soon to be resurfaced by the NJDOT, and the Borough desires to install new water distribution and sanitary sewer infrastructure in the existing NJDOT right-of-way *before* the road opening moratorium takes effect, the Borough must take immediate steps to secure engineering design, regulatory approvals, and project funding.

Phasing of the Overall Project

As proposed by the Borough, the overall project has been separated into three distinct phases:

- **Phase I** - Upgrades/replacements within the N.J. State Highway 35 corridor,
- **Phase II** - Upgrades/replacements west of N.J. State Highway 35 ("bay side"),
- **Phase III** - Upgrades/replacements east of N.J. State Highway 35 ("ocean side").

These three phases have been further divided into three major steps (of which this Feasibility Study/Conceptual Plan is the first):

- **Step 1** - Feasibility Study/Conceptual Plan (Borough-wide);
- **Step 2** - Preliminary and Final Design, Permitting, and Project Funding (for each of the three separate phases);
- **Step 3** - Construction (for each of the three separate phases).

Purpose of this Report

This Feasibility Study/Conceptual Plan will outline the key components that will need to be addressed in order for the Borough to proceed with the planned upgrade/ replacement of its water distribution and sanitary sewer systems. These components will include the water distribution and sanitary sewer design objectives, basic technical approach, permitting and construction requirements, and funding goals. Estimated costs associated with design, permitting, bonding, legal consultation, construction, construction administration and start-up will also be presented.

Project Costs

The following table gives a summary of the estimated costs for the project (by phase):

Engineer's Opinion of Probable Construction Costs

Description	Phase I	Phase II	Phase III	TOTAL
Construction - Potable Water	$2,550,000	$4,515,000	$5,444,000	**$12,509,000**
Construction - Sanitary Sewer	$3,880,000	$3,640,000	$6,060,000	**$13,580,000**
TOTAL CONSTRUCTION	**$6,430,000**	**$8,155,000**	**$11,504,000**	**$26,089,000**

Design/Permitting/Bidding/Construction Administrative/Legal Costs

Description	Phase I	Phase II	Phase III	TOTAL
Preliminary/Final Design/Bid	$357,000	$453,000	$639,000	**$1,449,000**
Permitting Fees	$45,161	$44,545	$54,425	**$144,131**
Legal/Bonding	$96,450	$122,325	$172,560	**$391,335**
Construction Management	$291,750	$370,000	$522,000	**$1,183,750**
TOTAL SOFT COSTS	**$790,361**	**$989,870**	**$1,387,985**	**$3,168,216**
TOTAL PROJECT COST	**$7,220,361**	**$9,144,870**	**$12,891,985**	**$29,257,216**

1.00 INTRODUCTION

1.01 *Town Description*

The Borough of Seaside Park (Borough) is located on the Barnegat Barrier Island in Ocean County, New Jersey. The Borough is located across the Barnegat Bay directly east of Berkeley Township. Seaside Park is bordered on the north by the Borough of Seaside Heights, on the south by Berkeley Township and Island Beach State Park, on the west by the Barnegat Bay, and the east by the Atlantic Ocean. The Borough was incorporated in 1898 and encompasses a total area of 0.77 square miles. While the year-round population of the Borough is just over 2,200 residents, the population balloons to over 20,000 during peak summer months.

The Borough is densely developed, and it is estimated that currently 95-99% of the lots in the Borough are occupied by either a residential or commercial structure. There are no major industrial or manufacturing businesses within the Borough. Since Seaside Park's eastern border contains nearly two miles of shoreline along the Atlantic Ocean, the Borough's main industry is summer tourism.

1.02 *Water Distribution System Description*

1.02.1 *General*

The Borough's water treatment/transmission/distribution system is owned, operated and maintained by the Borough's Water Department. The Borough's water system is identified as a public water system (PWSID #1527001) by the New Jersey Department of Environmental Protection (NJDEP). Per the NJDEP's Bureau of Water Allocation, the Borough has an allocated water supply of 38.0 million gallons per month (MGM) and 286.0 million gallons per year (MGY). The Borough's water distribution system is a self contained system; the Borough does not have any contractual obligations currently in place with any nearby water system. The Borough experiences high peaks of water demand during the summer months, due in part to the warmer temperatures but due mostly to the increased tourist population. According to the NJDEP's website, the maximum monthly average demand (MMAD) for the Borough was 0.891 millions gallons per day (MGD), or 27.6 MGM (which was experienced in July 2002). The highest annual usage occurred in 2004, when the demand was 213.3 MGY. The firm capacity surplus (which shall be discussed later in this report) is 0.117 MGD.

As stated above, at least 95% of the Borough's lots are currently occupied by either residential or commercial structures. Therefore there should be little or no increase in the future potable water demands. Since no major industrial or manufacturing businesses (i.e. large volume water users) are located within the Borough, the demand on the water distribution system is essentially uniform throughout all portions of the Borough.

1.02.2 *System Layout and Original Design*

The Borough's water distribution system consists of four (4) groundwater supply wells. Two wells (Well #8 and Well #9) are located near the Department of Public Works (DPW) building; the third well (Well #6) is located at the intersection of J Street and the

Boulevard; and the remaining well (Well #7) is located near the intersection Decatur Avenue and Lake Avenue. There is one (1) interconnection each with the Borough of Seaside Heights and the South Seaside Park section of Berkeley Township. However, these interconnections are used for emergency purposes only. As such, the Borough's entire potable water supply is derived from the four (4) groundwater wells.

The Borough disinfects its water with chlorine and each well has its own treatment facility and equipment. The Borough draws all of its groundwater supply from the Piney Point Aquifer, which is known for its high water quality. Therefore, water quality is not typically an issue of concern for the Borough. For storage purposes, the Borough's water system has two (2) 250,000 gallon waterspheroid tanks located at opposite ends of the Borough. One storage sphere is located across Barnegat Avenue from the DPW building in the southern portion of the Borough, and the other storage sphere is located near Well #7 in the northern end of the Borough. The entire water system operates at the same hydraulic grade line (pressure zone), and therefore, so do both waterspheroid tanks. The Borough's water main system consists of two (2) transmission water mains along N.J. State Highway 35 (Central Avenue) and one (1) transmission water main along Ocean Avenue. The size and routes of the transmission mains that run along Central Avenue are as follows:

- Eight (8") inch water main from 13th Avenue to J Street (south to north), additionally 8: down I Street to Bayview to East Well.
- Six (6") inch water main from E Street to Porter Avenue (south to north)

The six (6") inch transmission main on Ocean Avenue runs nearly the entire length of the eastern side of the Borough from 13th Avenue to Porter Avenue (south to north).

The distribution system mains are configured in a "grid" fashion and are located in the rights-of-way of nearly all the Borough's roads. The distribution system is comprised mostly (approximately 90-95%) of four (4") inch water mains, with a few sections of the Borough that are serviced by six (6") inch water mains. There are also limited amounts of 8", 10" and 12" water main located throughout the distribution system. (Further details concerning the system's performance are given later in this report.)

1.02.3 *System Deficiencies*

The transmission and distribution water mains within the Borough were reportedly installed between 80 and 100 years ago. The mains are primarily cast iron pipe (CIP). While cast iron pipe was once an industry standard, current standards dictate water mains to be constructed of ductile iron pipe (DIP). The average life expectancy for CIP is typically 50 to 100 years. Therefore, the system's water mains are nearing the end of their useful life and are starting to deteriorate. Evidence of this can be seen in the number of annual water main breaks in the Borough's water system (which will be discussed later in this report). The life expectancy of CIP is drastically reduced in areas where the soil is breached with saltwater intrusion at the groundwater table. Most of the low lying areas within the Borough's "bay side" experience this problem, and therefore, the underground water mains within the Borough's bay side are more susceptible to deterioration. In addition, many of the water mains were not installed at current industry standard depths

(between three (3') and four (4') feet deep). The shallow water mains along the bay side of the Borough are at risk of breaking under heavy loads or point-loading, especially since many of these mains have already experienced deterioration. Another indication that the existing water system is seriously dated is the size of the distribution and transmission water mains. The existing four (4") inch distribution mains and eight (8") inch transmission mains are smaller in diameter than required by current New Jersey Administrative Code. The deficient size of these lines could result in inadequate water supply if called upon for fire protection. Lastly, the water system was installed with lead-pack joints, which is another out-dated industry standard that has been updated since the existing water system's installation. These older lead joints are extremely susceptible to leakage as the systems ages.

1.03 *Sanitary Sewer System Description*

1.03.1 *General*

The Borough currently owns, operates and maintains a sanitary sewage collection/ conveyance system which consists of approximately fifteen (15) miles of sanitary sewer pipe that services all of the residents and businesses within the Borough. The majority of the Borough's sanitary sewer system consists of terra cotta (vitrified clay pipe - VCP) gravity sewer pipes, which in many cases were installed over 80 years ago. There are some sections of the Borough that are currently serviced by polyvinyl chloride (PVC) pipe. These sections are limited to the south and southwest portion of the Borough. These pipes were not installed due to expansion of the system, but as replacements of the existing VCP in response to reported breaks and collapses and in advance of scheduled roadway improvements.

1.03.2 *Original Design*

The Borough's sanitary sewer system is divided into two main drainage areas, the northern drainage area and the southern drainage area. Prior to the 1980's, wastewater in the northern area drained to a pump station located at the intersection of Central Avenue (N.J. State Highway 35) and K Street. The wastewater was then pumped through a ten (10") inch force main southward along Central Avenue to the upstream terminus manhole of a gravity interceptor located at the intersection of Central Avenue and C Street. This interceptor (18" diameter) flowed south along Central Avenue, turned west onto Island Avenue and then flowed south along Bayview Avenue. As the interceptor ran south along Bayview Avenue, it increased in size (to 20" diameter), and collected additional wastewater flow from the southern drainage area, until it ultimately reached the Borough's wastewater treatment plant (at the intersection of Barnegat Avenue and 14th Street). Wastewater flow was treated and was subsequently discharged to the Barnegat Bay from an outfall located at the western terminus of 14th Street.

1.03.3 *Regionalization*

In the mid 1970s, the Ocean County Utilities Authority (OCUA) began the regionalization of the treatment of wastewater within the County of Ocean. In order to service the Borough of Seaside Park (and the South Seaside Park section of Berkeley Township, the neighboring community to the south) an interceptor was installed along

the center of Central Avenue, from north (at the Borough of Seaside Heights border) south to 5th Avenue. Upon installation of the OCUA's interceptor, the Borough's pump station at the intersection of Central Avenue and K Street was dismantled, the 10" force main was abandoned, and the flow from the Borough's northern drainage area was connected directly to the OCUA's interceptor (at K Street and Central Avenue). The flow from the southern drainage area remained in the Borough's 18"/20" interceptor along Bayview Avenue, but at its downstream terminus, the Borough's interceptor was connected to a separate OCUA interceptor, which conveyed the flow from the Borough's southern drainage area (along with the flow from Berkeley Township) to a newly constructed OCUA pump station (at the intersection of Barnegat Avenue and 13th Avenue). The OCUA pump station conveys this wastewater flow through a ten (10") inch force main to the upstream terminus of the (aforementioned) OCUA interceptor (at 5th Avenue).

1.03.4 *System Deficiencies*

There are some sanitary sewer runs within the Borough in which the pipe is six (6") inches in diameter. Current NJDEP regulations call for the minimum size of a sewer main to be eight (8") inches.

There are several areas of the Borough in which the sanitary sewer pipe was installed at shallow burial depths. In some areas the burial depth is 21" to 24" to the invert of the pipe. For an eight (8") inch diameter VCP with an assumed wall thickness of one (1") inch, this leaves only 12" to 15" of burial depth to the crown of the pipe. Pipe materials buried at shallow depths are exposed more directly to point loading and/or surface loading from traffic. When considering the age and deterioration of the existing VCP sanitary sewer pipes within the Borough, combined with their shallow burial depths, future breaks and collapses are highly likely.

It should also be pointed out that there are many sanitary sewer runs within the Borough (mostly on the ocean side) that exceed 400 linear feet without manhole access. State regulations and standard wastewater practice requires manhole access for cleaning purposes every 400 feet for sanitary sewer pipes 18" or less in diameter, and 500 feet for sanitary sewer pipes greater than 18" diameter or greater.

1.04 *Need for the Project*

Similar to the buried utilities owned and maintained by many of the coastal communities of New Jersey, the Borough's water distribution and sanitary sewer systems have exhibited slow degradation and material failure as they approach the end of their useful service lives. This material failure has occurred on a regular (and slightly increasing) pattern over the past few decades. As previously stated, the Borough has already performed several emergency repairs to sections of the water distribution and the sanitary sewer system in response to reported breaks and collapses.

Due to its age and state of deterioration, extraneous flows enter the sanitary sewer system through leaking brick manholes, offset and broken pipe joints and broken service connections from residential units. The extraneous flows are particularly heavy during wet weather events where higher ground water levels allow greater amounts of water to

infiltrate into the sanitary sewer system. As a result of this excessive infiltration, the Borough pays a premium for the treatment of its wastewater. The Borough also experiences occasional sanitary sewer overflows (SSOs) and back-ups resulting from maintenance problems typical with an older system and occasionally experiences SSOs due to the rainfall induced infiltration/inflow (RI I/I). Additionally collapsed sanitary sewer represent a potential hazard for pedestrians and motor vehicles.

1.05 *Timing of the Project*

Over the past several years, numerous discussions concerning the necessary upgrades to the water distribution and sanitary sewer systems have been held. While the issues are widely understood and have been accepted within the Borough, the timing, project structure, and overall strategy for the implementation of the required improvements have never been formalized. Recent actions by the New Jersey Department of Transportation (NJDOT), however, have forced the Borough into the position where immediate action is required. The NJDOT has begun the planning and design phases for drainage improvements and resurfacing of the entire length of the Central Avenue right-of-way (N.J. State Highway 35). The NJDOT anticipates beginning their construction in the spring of 2008. After resurfacing is complete, disturbance of the new pavement for utility construction will not be permitted during the codified seven (7) year moratorium period.

The deterioration of the water distribution and sanitary sewer systems (which threatens the health and welfare of the community by slow, systematic disintegration) is imminent and most likely in its final stages. The proposed construction by the NJDOT therefore serves as a springboard for several decisions which must be made promptly by Borough leaders: As Central Avenue serves as the primary corridor through Seaside Park for the water distribution and sanitary sewage collection system, new water distribution and sanitary sewer infrastructure along Central Avenue would represent the "backbone" around which the proposed improvements for the remainder of the Borough would be built. If Central Avenue is soon to be resurfaced by the NJDOT and the Borough desires to install new water distribution and sanitary sewer infrastructure in the existing NJDOT right-of-way *before* the road opening moratorium takes effect, the Borough must take immediate steps to secure engineering design, regulatory approvals, and project funding.

1.06 *Project Phasing*

Broadly speaking, it is anticipated that the Borough's water distribution and sanitary sewer infrastructure upgrade project will be performed in three major steps:

- **Step 1** - Feasibility Study/Conceptual Plan (Borough-wide);
- **Step 2** - Preliminary and Final Design, Permitting, and Project Funding (broken into three separate phases);
- **Step 3** - Construction (broken into three separate phases).

In response to the first of the three major steps, and in order to address the complex scheduling, planning, design, permitting and construction challenges presented by the project frameworks of the NJDOT's roadway reconstruction and the Borough's proposed water distribution and sanitary sewer infrastructure upgrade, Schoor DePalma has

prepared this Borough-wide Feasibility Study/Conceptual Plan. The Feasibility Study/Conceptual Plan is intended to outline the water distribution and sanitary sewer design objectives, basic technical approach, permitting requirements, and funding goals for the ***entire*** project. The second and third steps will commence upon acceptance and approval of the Feasibility Study/Conceptual Plan by the Borough, and upon securing funding from the appropriate governmental agencies.

As indicated above, it is anticipated that Step 2 (design/permitting/funding of the water distribution and sanitary sewer system upgrades) and Step 3 (public bidding and construction of the water distribution and sanitary sewer system upgrades) will occur in three separate phases. Phase I will include the water distribution and sanitary sewer replacement within the N.J. State Highway 35 corridor, Phase II will involve the water distribution and sanitary sewer replacement west of N.J. State Highway 35 ("bay side"), and Phase III will involve the water distribution and sanitary sewer replacement east of N.J. State Highway 35 ("ocean side").

The proposed phasing of the project can be seen on the mapping contained in Appendix A and B of this report.

2.00 WATER SYSTEM - PERFORMANCE/DESIGN CRITERIA

2.01 *Introduction*

The following paragraphs give system performance and design criteria required to analyze the performance of the Borough's water supply and distribution system. Comparing the system criteria to the actual data collected (discussed later in this report) will accurately gauge the performance of the water system. The system performance criteria are cited from either the New Jersey Administrative Code (N.J.A.C.) or other local and/or federal regulations.

2.02 *Regulations and Requirements for Water System*

2.02.1 *General Design*

Per N.J.A.C. 7:10-11.10 (d), *regulations for the capacity and size of water mains are as follows:*

1. *Design capacity of water mains shall be such as to maintain a minimum pressure of 20 pounds per square inch (psi) at street level under all flow conditions.*
2. *The minimum diameter of all distribution mains shall be six inches for systems with an average demand of less than 1 MGD...The Department* [NJDEP] *shall not approve a water distribution main of less than six inches in diameter if it is intended to supply a fire hydrant(s) or if there is a reasonable possibility that it will be extended to serve additional properties or areas.*

Per N.J.A.C. 7:10-11.10 (e), *general design requirements for water mains are as follows:*

2. *Water mains shall be designed to provide a maximum flow velocity (excluding fire service flow) of five feet per second for mains up to 16 inches in diameter...*
3. *All distribution mains shall be covered with a minimum of 3.5 feet of earth or other suitable cover to prevent freezing.*
5. *All water mains and sanitary or industrial sewer lines shall be separated by a horizontal distance of 10 feet...*

Special care must be given to ensure that potable water system design facilitates turnover of the water. Consideration should be given to acceptable means to avoid stagnation. Over-sizing of the water main diameters shall be averted to guarantee the highest water quality and the most efficient material costs.

2.02.2 *Fire Flow Source*

Per AWWA M31 *Distribution System Requirements for Fire Protection* and the ISO *Fire Suppression Rating Schedule*, the existing water supplier must maintain enough hydraulic capacity in the system to protect its properties against fire, in addition to providing domestic demands. Each guideline uses the same determining factors (including building size, proximity to other buildings, communications with other buildings, etc.) in order to establish the necessary fire protection demands for a given building/property. The

necessary fire protection demands shall include the required flow, pressure, duration, and degree of internal piping (if necessary) for each building.

For the purposes of this study, it shall be assumed that the Needed Fire Flow (NFF) shall be 2,500 gallons per minute (gpm) for a duration of two (2) hours at a minimum residual pressure of 20 psi. (Since fire protection is a critical design criteria, this figure has been conservatively approximated.)

2.02.3 *Firm Source Capacity*

Per N.J.A.C. 7:10-11.6 (a), *the components of a public community water system, including source, treatment, storage and distribution facilities shall be designed and constructed to meet all the demand requirements imposed on the water system and shall have the firm capacity to meet the applicable peak daily demand...*

N.J.A.C. continues to define "Firm capacity" as *adequate pumping equipment and/or treatment capacity (excluding coagulation, flocculation and sedimentation), and/or adequate capacity by supply from another water system pursuant to contract to meet peak daily demand...when the largest pumping or treatment unit is out of service.*

Per N.J.A.C. 7:10-11.5 (e) 1, *the proposed water system will have adequate firm capacity to meet peak daily demand, including:*

1. *Existing peak daily demand, that is, the average daily demand as recorded in the peak month of the prior five years*

2.02.4 *Storage Requirements*

Per N.J.A.C. 7:10-11.11 (a), *suppliers of water shall provide finished water storage as required pursuant to N.J.A.C. 7:19-6.7 and as follows:*

1. *Each public community water system shall provide storage for finished water as an integral part of its distribution system whether the water system has its own source(s) of water or buys water from another public community water system*
2. *The location, size, type and elevation of the equalization reservoir, standpipe, or elevated storage tank shall be such as to ensure that the distribution system meets the pressure requirements established at N.J.A.C. 7:10-11.10(d). A system designed to provide for fire protection shall, in addition, provide gravity storage...*

2.02.5 *Leakage*

Per AWWA C600-99, Installation of Ductile Iron Water Mains and Their Appurtenances, Section 5.2.1.6 Testing Allowance, *no pipe installation will be accepted if the amount of makeup water is greater than that determined by the following formula:*
In inch-pound units:

$$L = (S \times D)\,(P^{0.5}) / (133{,}200)$$

Where:

L = *testing allowance (makeup water), in gallons per hour*
S = *length of pipe tested, in feet*
D = *nominal diameter of the pipe, in inches*
P = *average test pressure during the hydrostatic test, in psi*

2.02.6 *Chlorine Contact Time and Residual*

Per N.J.A.C. 7:10-11.11 (e), *regulations for chlorine contact period and chlorine residual are as follows:*

1. *To afford adequate protection for both surface water and ground water, chlorination treatment systems shall be designed to ensure the following minimum chlorine contact periods before the water enters the public community water system distribution system. The engineer's report submitted with the application for a permit under this subchapter shall demonstrate that these requirements are met.*
    i. *Ground water shall be treated for a minimum chlorine contact period of at least five minutes to produce the minimum free chlorine residual level required pursuant to 3 below or at least 30 minutes to produce the minimum combined chlorine residual level required pursuant to (3) below.*
2. *A post-chlorination treatment with a minimum of five (5) minutes chlorine contact time shall be employed by all public community water systems.*
3. *Chlorination treatment units shall be designed to produce the following chlorine residuals at the specified pH values:*

Required Chlorine Residuals at Specified pH Values

pH Value	*Available Chlorine Residual*	
	Free	*Combined*
Up to 7.0	*0.2 ppm*	*1.0 ppm*
7.0 to 8.0	*0.3 ppm*	*1.5 ppm*
8.0 to 9.0	*0.4 ppm*	*2.0 ppm*

3.00 WATER DISTRIBUTION SYSTEM - DATA COLLECTION AND ANALYSIS

3.01 *Introduction*

The purpose of this section is to analyze the existing water system's performance and compare it to the system performance criteria to determine the Borough's water distribution system's overall efficiency. Existing system data, obtained through field reconnaissance and from the Borough's Water Department personnel, helped gauge how well the water system (whose infrastructure ranges from 80 to 100 years old) measures against current local, state, and federal performance criteria. Hydrant flow tests were performed to obtain a Hydraulic Analysis of the Borough's water distribution system. The Hydraulic Analysis was then compared against the aforementioned standards in order to determine and verify the need for infrastructure replacement.

The following paragraphs outline the data that was collected for the Borough's existing water system and demonstrate the respective comparison to the system's targeted performance.

3.02 *Existing System Data*

3.02.1 *Water Main Infrastructure Age*

The majority of the Borough's water distribution infrastructure was installed approximately 80 to 100 years ago. Evidence of the pipe's age can be seen in the corrosion of the wall thickness of the original CIP. Wall thicknesses of CIP coupons at water main breaks of similar age and material have ranged from 10% to 20% of the pipe original thickness.

3.02.2 *Water Main Size*

The system's transmission mains consists of six (6") inch and eight (8") inch CIP, and the distribution mains consists typically of four (4") inch CIP. Per current N.J.A.C. regulations, distribution water mains should be a minimum of six (6") inches in diameter.

Further, distribution and transmission mains should be eight (8") inch in diameter wherever fire hydrants are served.

3.02.3 *Burial Depth*

Per the Borough's Water Department, excavations to repair broken water mains have revealed that some of the system's water mains were installed at extremely shallow depths, some as shallow as 12" to 18". Water mains buried this shallow are far more susceptible to risks such as breaking or freezing, especially when considering the age and deterioration of the existing CIP mains within the Borough. Per current N.J.A.C. regulations, minimum burial depth of water mains is three (3') feet.

3.02.4 *Bedding Requirements*

As with the Burial Depth above, when considering all other relative factors (such as the shallow burial depths and main corrosion) inadequate bedding is an issue of concern. Water main breaks are far more likely to occur when the main is not adequately bedded, and the main is subjected to heavy loading.

Whereas the existing water mains are reportedly installed over in-situ soils, any new mains would be constructed upon suitable bedding.

3.02.5 *Polyethylene Encasement (pipe wrap)*

Due to the age of the water distribution system's installation, it can be concluded that the existing CIP was not installed with polyethylene encasement and therefore, is subject to chemical corrosion.

Newly installed water pipe lines would include such a wrapping system, where deemed necessary.

3.02.6 *Cathodic Protection*

Due to the age of the water distribution system's installation, it can be concluded that the existing CIP was not installed with cathodic protection. Without the installation of cathodic protection, the CIP has been vulnerable to degradation from electric corrosion.

As noted above, any newly installed water mains could include a polyethylene wrapping system, where required.

3.02.7 *Joint Types*

When the water main was installed 80 to 100 years ago, the industry standard at the time was to install lead pack joints. Since then, ductile iron joints have replaced the lead packs. The NJDEP currently restricts lead pack joints to cast iron installations.

3.03 *Hydraulic Analysis*

In order to completely understand the Borough's existing water distribution system, Schoor DePalma personnel conducted extensive field reconnaissance of the entire system. Static-residual hydrant flow tests were performed at ten (10) locations throughout the Borough. The hydrant flow tests included recording static system pressures, steady flow rates, and residual pressure during the steady flow. The data obtained from the hydrant flow tests was then inputted into a Hardy-Cross Analysis program to accurately gauge the performance of the existing water distribution system.

According to the Hardy-Cross Analysis, under peak daily demands, the available fire flow is less than 1,500 gpm in a significant number of locations throughout the Borough's water distribution system. (This situation is mostly prevalent at locations within the Borough that are inadequately looped). A 1,500 gpm flow is the minimum

amount of fire flow recommended by AWWA Manual M31, *"Distribution System Requirements for Fire Protection"* for a single family dwelling. Areas such as K Street, K Court, Eighth Avenue "bay side," and Seventh Avenue "bay side" experience fire flows of less then 700 gpm. Since the existing infrastructure cannot provide adequate fire protection for a significant number of the existing homes within the Borough, replacement of the undersized, deteriorating water main is recommended.

As per the Hardy-Cross Analysis and hydrant flow tests, there were areas within the Borough that did not perform nearly as well as expected. Areas such 4th Avenue "ocean side" and L Street "bay side" supplied far less water than would be expected from a properly performing water distribution system. The overall lack of system performance can be attributed to the lack of adequate distribution main sizing, as well as the poor condition of the existing water mains.

3.04 *Water Quality Analysis*

As stated previously, the Borough draws its groundwater supply from the Piney Point Aquifer. The Borough has no bulk purchase interconnections with adjacent water systems. (However, there are emergency connections to the Berkeley Township (Shore Water Company) and Seaside Heights water systems.) The Piney Point Aquifer is known for supplying water with high quality, and the Borough does not have any history of water quality-related problems. Therefore, replacement of the water distribution system will have no negative impact on current water quality.

3.05 *Discussion of Breakage History*

Over the past 10-12 years, the Borough has responded to an increasing number of water main breaks. The majority of these events have occurred within the southwest portion of the Borough (southern bay side), with some isolated repairs being necessary in the south/central portion of the Borough. The repairs generally included replacing the existing CIP with DIP, and removing the cast iron valves and replacing them with ductile iron valves. There were also a number of customer service line replacements as a result of breakage.

Without any systematic replacement schedule, in the upcoming years the Borough's Water Department can expect to experience more frequent water main breaks. The Borough has reported a minimum of at least one (1) water main break (due to material failure) each year for at least the past 20 years. The Borough can anticipate that the annual number of water main breaks will only increase as the system ages further.

3.06 *Discussion of Actual Performance Data v. System Performance Criteria*

Per the Hardy-Cross Analysis, a recommended 2,500 gpm fire flow was modeled under peak daily demands at various locations throughout the Borough's water distribution system (specifically at locations deemed "weak" as stated in the Hydraulic Analysis section). The flow was determined based on the upper limit for residential (one- and two-family dwellings) given by AWWA Manual M31, *"Distribution System Requirements for Fire Protection"*. The model indicated several areas of deficient fire flow throughout the system. Further, per N.J.A.C., public water systems are required to provide residents

with a minimum residual pressure of 20 psi under fire flow conditions. The existing system's general inability to maintain codified minimum pressures during high-flow events is a primary indicator of the need for rehabilitation.

It should be noted that the existing storage, pumping and/or treatment equipment/ facilities have been excluded from this comparison. However, all of the Borough's existing storage, pumping and/or treatment equipment/facilities are considered adequate and compliant from a regulatory standpoint. Further, all existing storage, pumping, and treatment equipment and facilities have been deemed adequate for future usage after water distribution system rehabilitation has been completed.

4.00 SANITARY SEWER SYSTEM - PERFORMANCE

4.01 *Introduction*

As previously stated, the Borough's sanitary collection/conveyance system consists of approximately 15 miles of gravity sewer pipe. Wastewater flow from the northern service area of the Borough drains to a connection to the OCUA interceptor at the intersection of Central Avenue and K Street. Wastewater flow from the southern service area is collected by the Borough's main interceptor and is conveyed to the OCUA's pump station at the intersection of Barnegat Avenue and 13th Avenue, and the flow is subsequently pumped to the OCUA interceptor.

Since the regionalization of wastewater collection and treatment by the OCUA and the dismantling of the Borough's pump station (formerly at the intersection of Central Avenue and K Street) the Borough's entire sanitary sewer system operates by gravity.

4.02 *Existing System Performance*

In order to completely understand the Borough's existing sanitary sewer infrastructure, and to anticipate the demands that would be placed on the proposed upgraded/replaced system, Schoor DePalma conducted extensive field reconnaissance of the entire system. At-grade manhole inspections were conducted at over 200 manholes throughout the Borough. The manhole inspections included recording each manhole's materials and structural condition, evidence of leakage (infiltration), debris build up and/or evidence of surcharging, flow direction, as well as pipe sizes, materials and depths.

In general (as observed from street level) the Borough's sanitary sewer system appeared to be operating adequately. The majority of the manholes that were inspected appeared to be structurally sound, however there were some instances of missing mortar and slightly shifted bricks in some of the manholes. There were instances of debris build-up along the benches within a few of the manholes, but in general the debris was minor. The wastewater flow in the vast majority of the manholes was smooth and uninterrupted. There were two (2) instances of surcharged conditions; one instance was due to the manhole's outlet pipe being at a higher elevation than the inlet pipes; wastewater had to accumulate at the bottom of the manhole until it reached a height were the flow could continue out of the outlet pipe. In the second instance, all of the outlet and inlet pipes at the manhole were totally submerged; the cause of this surcharged condition could not be determined.

While the general nature of the wastewater flow through the system appeared to be normal, and no excessive infiltration (abundant clear flow) was witnessed during the inspections, it should be noted that evidence of on-going infiltration was apparent in the majority of the (brick) manholes that were inspected. Evidence of infiltration/inflow into manholes was commonplace throughout all sections of the Borough. This infiltration/ inflow enters the manholes either beneath the manhole cover castings or directly through the manhole walls. The infiltration issue was most predominant in the manholes within the western ("bay side") areas of the Borough. Evidence of previous surcharged conditions (noted as dark staining along manhole walls and/or evidence of the remains of "floatables" stuck to manhole steps and/or walls) was unmistakable within the majority of

the interceptor manholes along Bayview Avenue. The evidence of previous surcharge in these manholes is understandable, as the manholes are of brick construction, are in the lowest lying area of the Borough (grade elevation approx. + 4.0) and service the entire southern portion of the Borough. It is likely that during wet weather events, or even during high tide, groundwater leaks into the sewer system through broken pipes and directly through the manholes, causing higher than normal flows which lead to surcharged conditions. Any illicit sump pumps and/or roof/floor/yard drains connected to the sanitary sewer system would only exacerbate this situation.

There were several cases where Schoor DePalma personnel witnessed groundwater infiltrating directly into the manholes, either through mortar that was missing between bricks in the manhole walls or through gaps/voids between inlet pipes and the manhole wall. Again, these events generally occurred throughout the bay side area of the Borough.

It should be noted that the field reconnaissance was conducted during a dry period in mid-August 2006. Additional sources of inflow/infiltration may have been more evident immediately after a wet weather event or during periods of high tide. Also, as Schoor DePalma personnel did not enter any manholes, and since no closed circuit television (CCTV) inspections were conducted, the structural condition of the sanitary sewer pipes could not be determined. Therefore, potential infiltration sources from misaligned pipe joints, pipe breaks or from faulty house service connections (which could be discerned from CCTV by noting extended periods of uninterrupted clear flow) were not verified.

No smoke testing was performed during the field reconnaissance; therefore no illicit connections (sump pumps and/or roof/floor/yard drains) to the system were discovered.

Many of the sanitary sewer manholes could not be inspected because they were either inaccessible, wedged shut, or paved over. (The majority of the manholes along Ocean Avenue have been paved over.) Manholes that were inaccessible, unable to be opened or paved over are noted as such on the Conceptual Plan. (A spreadsheet containing these manholes is given in Appendix H of this report.)

4.03 *Discussion of Breaks/Collapse History*

Over the past 20 years, the Borough has responded to an increasing number of sewer breaks and collapses. The majority of these instances have occurred within the south west portion of the Borough (southern bay side), with some isolated repairs being necessary in the south/central portion of the Borough as well. The repairs were made by replacing the existing VCP with PVC pipe, and removing the brick manholes and replacing them with pre-cast concrete manholes. (The recent repairs are noted as such on the Conceptual Plan, and are included on a spreadsheet in Appendix G of this report.)

5.00 ALTERNATIVE ANALYSIS - WATER DISTRIBUTION SYSTEM

5.01 *Introduction*

As discussed in detail, the water distribution system owned, operated and maintained by the Borough is exhibiting signs of progressive failure. Various failures (generally water main breaks) have been monitored over the service life of the distribution network and, over the past 20 years, the frequency of breaks has begun to steadily increase. Reasons for these failures are in some cases related to burial methods: pipe materials buried at shallow depths are exposed more directly to surface loading from traffic, and are more susceptible to alternating loading during the annual freeze/thaw cycle. However, the primary cause of failure is the direct burial of CIP in soils with a high groundwater table. The CIP (which comprises the majority of the distribution network) is vulnerable to the structurally-degrading effect of corrosion - both chemical and electrical. The existing CIP are neither wrapped in plastic sheathing, nor protected cathodically and, as a result, much of the distribution system's pipe-wall material has disintegrated at an undetermined rate during its service life. This condition is typical for ferrous materials used in buried water systems. The best evidence of pipe material corrosion rates is the thickness of pipe wall at failure points. Bored on samples of pipe coupons at recent water main break repairs of similar age, failed pipe-wall thicknesses have ranged between 10% and 20% of their original design specification.

Judging by the rate of disintegration, and based on the service life of the majority of the Borough's water mains (80 to 100 years) it can be assumed that any portion of the distribution system is susceptible to failure through the application of a point load (examples: water hammer, heavy surface traffic, etc.). This assumption is based on the theory of metal loss resulting from external pipe corrosion coupled with historical pipe failure data. This data suggests a minimum of one (1) water main break (due to material failure) each year for at least the past 20 years. In summary: the trend is expected to continue and to increase in frequency.

Based on the water distribution system's service life, it is safe to assume that the application of an acute point load could cause failure in any of the buried pipes in the Borough, particularly those with shallow burial depth. Further, as discussed previously, many locations throughout the service area do not currently experience an adequate level of fire protection (based on existing system hydraulics).

Based on the above discussion concerning material failure and system performance inadequacy, the generally accepted course of action has been for a total water distribution system replacement. For the purpose of this Feasibility Study/Conceptual Plan, the Borough is considering two (2) alternatives. The first alternative is the "No Action Alternative" (Reactive Approach) in which the water distribution system remains in its current state, and repairs to the system are performed on a case-by-case basis, as the system fails. The second alternative is the Upgrade/Replacement Alternative (Proactive Approach) which includes a complete replacement of the Borough's water distribution infrastructure. Both alternatives are discussed below in detail regarding the Borough's aging infrastructure, the health and welfare of the community and the anticipated environmental and economic impacts.

5.02 *No Action Alternative (Reactive Approach)*

5.02.1 *Introduction*

The Reactive (or "No Action Alternate") Approach specifies no coordinated planning or construction solutions for the problems of progressive imminent system material failure and lack of adequate fire flow. This approach suggests that the municipality accept the possibility that a water break may occur anywhere in their system, and these repairs will need to be made on an emergency basis. It would be further understood that many of the structures in the Borough are not covered by an adequate volume of water flow for fire protection. Any actions under this approach would be triggered by emergencies (typically a water main break) resulting in the replacement of at least a single run of unbroken water main. Under an extreme condition (i.e.: destruction of a large structure/ structures due to inadequate fire protection) certain sections of the distribution infrastructure would be replaced, with the goal of elevating available fire flow in certain areas of the system. However, if the Reactive Approach were to be adopted, it is unlikely that such emergencies would result in a comprehensive, system-wide capital improvement plan.

5.02.2 *Economics*

Although there would not be a defined capital improvement cost associated with the No Action Alternative, there would still be an associated cost in the repair of water mains under emergency conditions. In estimating the economics of this alternative, the assumption was made (based on the trend of historical data) that emergencies would necessitate the replacement of approximately 2,000 linear feet (LF) of water main per year:

> 2,000 LF of main replacement on an emergency basis (include 50% markup for emergency wages and equipment rental and expedited materials delivery) = $500,000 annually (in FY 2006 dollars)

Further, the continued non-attention to system performance will likely drive the cost of insurance higher for property-holders over time, based on lowered ISO (Insurance Services Office) review results.

5.02.3 *Environmental Effects*

The environmental effects of the Reactive Approach are related to a single measurable item: water source pumpage. The Borough depends on the pumpage of four (4) wells to supply potable water to residences and businesses. The existing system (with deficient joints and old corporation stop service connections) experiences roughly 15% unaccounted-for water. With annual pumpage in the range of 210 to 220 MGY, the Reactive Approach does not address the estimated 32 MGY of finished water lost to leakage within the system.

5.02.4 *Implementation*

The Reactive Approach presents difficulty in implementation, in that it relies on the efforts of emergency contract construction, operating on a non-predictable timetable. From a systems operation standpoint, it is possible to implement this approach, but there will be no satisfactory measure for when the system meets its goals for robustness (resistance to loading), flow performance (fire flow availability), or environmental economy (minimization of over-pumping source aquifers).

Further, if the Borough does not upgrade or replace its water distribution system along Central Avenue prior to the NJDOT's proposed road resurfacing project (which is expected to begin in 2008 and is anticipated to be completed by 2009) the opportunity to upgrade or replace the lines will not present itself until 2016, when the codified seven (7) year moratorium expires.

5.02.5 *Conclusion*

Due to the fact that the No Action Alternative will not address any of the issues described above, and has the potential to have a negative impact on water distribution and fire flow protection, this alternative should not be considered further.

5.03 *Upgrade/Replacement Alternative (Proactive Approach)*

5.03.1 *Introduction*

The Proactive (or "planned construction") Approach espouses a specific, systematic phasing of planning and construction solutions for the problems of imminent system material failure and lack of adequate fire flow. This approach gives the Borough hands-on control over the manner in which their water distribution system will be rehabilitated (from both a cost and a scheduling perspective). Actions taken under this approach would not be random; rather, they are dictated by a pre-planned and pre-funded construction schedule which has been thoroughly reviewed and approved by all involved parties. The Proactive Approach seeks to address all major concerns regarding system performance and robustness within a specific, measurable timeframe.

5.03.2 *Economics*

As discussed earlier, the replacement of the Borough's water distribution infrastructure will take place over three phases. Preliminary construction cost estimates (excluding engineering design and construction administration, legal costs, and financial consultation) for each phase of work are given below:

Phase I	$ 2,600,000
Phase II	$ 4,600,000
Phase III	$ 5,500,000

A further breakdown of the Engineer's Estimate of Probable Construction Costs is given in Appendix E of this report.

Please refer to Section 9.00 (Total Project Costs) of this report for a table outlining the total project costs (including preliminary/final design/permitting/bidding services/legal/ bond counsel/construction and administration).

5.03.3 *Environmental Effects*

The environmental effects of the Proactive Policy will be related to one measurable item: water source pumpage. Seaside Park Borough depends on the pumpage of four (4) wells to supply potable water to residences and businesses. The existing system (with deficient joints and old corporation stop service connections) experiences roughly 15% unaccounted-for water. The Proactive Approach is anticipated to reduce the item of unaccounted-for water to 5% by the end of the five (5) year construction schedule, for a savings of roughly 22,000,000 gallons of aquifer pumpage (and subsequent water treatment) annually.

5.03.4 *Implementation*

Implementation of the Proactive Approach is predicated on the willingness to plan and expend the monetary resources necessary to execute the work. As discussed in the Project Phasing section of this report, the implementation plan for the replacement/upgrade of the water distribution system calls for a phased approach for planning and preliminary/final engineering design, followed by loan authorization, sequenced bonding, public bidding of the project, and construction.

5.04 *Comparison of the Reactive and Proactive Approaches*

Please see the following table, comparing selection criteria (per N.J.A.C. 7:22-10.4(c)5) for the alternative project approaches discussed above:

Alternative	Economics	Environmental Effects	Implementation
Reactive	$607/year*	continued over-pumpage of aquifers	executed on an emergency basis
Proactive	$557/year**	mitigation of aquifer over-pumpage from 15% to 5%	systematic, planned implementation

** additional annual cost, based $750K annual capital cost + $200 average additional annual insurance premiums, based on a tax bases of 1,994 assessed property-holders*

*** additional cost for $25,050,000 loan amortized over 30 years at 2.00% interest, split among taxpayer base of 2,300*

**** existing average municipal tax rate per deed-holder is ~$6,800/year*

5.05 *Conclusion*

The effectiveness of the Upgrade/Replacement Alternative is that a newly constructed water transmission/distribution system should alleviate, for years to come, any leaks or major failures that could lead to the potential endangerment of the health and welfare of the community and environment. The Borough would benefit financially from this alternative, as there will be a marked reduction in the loss of treated water due to leakage within the system. Accordingly the costs for the pumpage and treatment of this unaccounted for water would be eliminated.

For all of the above reasons, we recommend that the Borough proceed with the Upgrade/ Replacement Alternative, which would allow the Borough to replace the existing water transmission/distribution system in an efficient, managed, and phased approach.

6.00 ALTERNATIVE ANALYSIS - SANITARY SEWER SYSTEM

6.01 *Introduction*

As stated above, the sanitary sewer system has exhibited slow degradation and material failure as the system approaches the end of its useful service life. This material failure has occurred on a regular (and slightly increasing) pattern over the past few decades. Although the manholes that were inspected generally appear to be structurally sound, the majority of them are showing significant signs of wear (loose mortar, rusted manhole steps, gaps between the manhole and its casting, etc.). Although the pipes themselves were not inspected, based on the number of emergency repairs and sewage stoppages that the Borough has undertaken in recent years, it is evident that the deterioration of the sanitary sewer system (which threatens the health and welfare of the community by slow, systematic disintegration) is imminent and in its final stages of useful life.

As part of the Feasibility Study/Conceptual Plan, the Borough is considering two (2) alternatives. The first alternative is the "No Action Alternative" (Reactive Approach) in which the sanitary sewer system remains in its current state, and repairs to the system are performed on a case-by-case basis, as the system fails. The second alternative is the Upgrade/Replacement Alternative (Proactive Approach) which includes a complete replacement of the Borough's sanitary sewer infrastructure. Both alternatives are discussed below in detail regarding the Borough's aging infrastructure, the health and welfare of the community and the environmental and economic impacts.

6.02 *No Action Alternative (Reactive Approach)*

6.02.1 *Introduction*

In the No Action Alternative, no immediate improvements are proposed for the existing sanitary sewer infrastructure. As the pipe materials age and deteriorate, future breaks and collapses are imminent and will certainly continue (and occurrences will possibly increase as the system ages further). The Borough would continue to repair the system as it fails, reacting to calls from residents when blockages, back-ups, SSO discharges and/or road collapses occur.

The ineffectiveness of this method of repair is that the Borough will not have any advance notice of where or when a sanitary sewer pipe will break or collapse. The Borough will not be able to control the time or place to perform a repair; the time and place will be dictated as the system fails. Further, any collapse would require an outside contractor to make the necessary repairs, most often on an emergency basis, requiring payment of premium wages to the laborers employed for such repair. However, a collapse of a sewer along or across Central Avenue (N.J. State Highway 35) during peak summer months would hamper access to the southern portion of the Borough (and subsequently to Berkeley Township and Island Beach State Park) and could cause major delays for tourists as they arrive or depart from their destinations. More critically, a break or collapse of a sanitary sewer line during a major winter storm or a nor'easter would divert resources in order to repair the sewer break that could be more efficiently used in emergency management or rescue.

6.02.2 *Economics*

Although there would not be a capital improvement cost associated with the No Action Alternative, there is still an associated cost in the repair of sanitary sewer mains under emergency conditions. In estimating the economics of this alternative, the assumption was made (based on the trend of historical data) that emergencies would necessitate the replacement of approximately 750 linear feet (LF) of sanitary sewer pipe per year:

> 750 LF of main replacement on an emergency basis (include 50% markup for emergency wages and equipment rental and expedited materials delivery) = $250,000 annually (in FY 2006 dollars)

The major downside to the No Action Alternative is that it does not address the extraneous flow problem that affects the Borough. Currently, potable water supply for the entire Borough averages 220 million gallons (MG) per year. The typical wastewater flow in the Borough's sanitary sewer system (as metered by the OCUA) is 290 MG per year. According to industry standards, 80% of potable water makes its way to the sanitary system (the other 20% is used for watering lawns, washing cars, filling swimming pools, etc.). Allowing for a ten (10%) percent acceptable infiltration rate (for a "tight" sewer system), theoretically the total wastewater flow for the Borough should be 195 MGD. Therefore the Borough is, on the average, paying for the treatment of an additional 95 MG per year of extraneous flow. The treatment fee charged by the OCUA is $3,400 per MG of flow. Consequently, the cost of treatment of extraneous flow is approximately $325,000 per year. As the existing sanitary sewer system continues to degrade and fail, the infiltration situation will only worsen, which will lead to increasingly higher costs for the treatment of extraneous flow.

While the Borough has undertaken numerous projects since 1990 to mitigate RI I/I at the most vulnerable locations, infiltration is endemic to the entire sanitary sewer system considering that the system is constructed of three (3') foot sections of VCP pipe. Thus, there is the potential of a leaking pipe joint every three (3') feet along the entire sanitary sewer system.

Finally, as the sanitary sewer system deteriorates, the Borough is assured that the system will continue to fail without warnings; and the occurrence of SSOs will undoubtedly increase. In light of the above, the potential for fines from regulatory agencies will increase correspondingly.

6.02.3 *Environmental Effects*

As the sanitary sewer system deteriorates, the Borough is assured that the system will continue to fail without warning; and the occurrence of SSOs will undoubtedly increase, potentially impacting the surrounding environs.

Also, if the sanitary sewer system is not repaired, the problem of exfiltration increases, where wastewater within a pipe leaks out of the pipe and into the ground. This situation would lead to the potential of contamination of groundwater and drinking water, and (since the Borough is a coastal community) the potential contamination of bay and ocean

waters, thus potentially endangering the health and welfare of the community and the surrounding environment.

6.02.4 *Implementation*

The Reactive Approach presents difficulty in implementation, in that it relies on the efforts of emergency contract construction, operating on a non-predictable timetable. The nuisance of emergency repairs will continue to plague the Borough, and the Municipality will continue to pay premium labor wages for contracted labor and rental rates for equipment to perform piecemeal emergency repairs. As more extraneous flow enters the failing system, the cost to the Borough of treating the additional flow will continue to increase. In addition, the failing system further strains the Borough's economy due to the additional resources that must be utilized in the normal day-to-day maintenance of a deteriorating system that contains excessive amounts of inflow and infiltration.

Further, if the Borough does not upgrade or replace its sanitary sewers along Central Avenue prior to the NJDOT's proposed road resurfacing project (which is expected to begin in 2008) the opportunity to upgrade or replace the lines will not present itself until 2016, when the codified seven (7) year moratorium expires.

6.02.5 *Conclusion*

Due to the fact that the No Action Alternative will not address any of the issues described above and has the potential to have a negative impact on drinking water and the surrounding environs, this alternative should not be considered further.

6.03 *Upgrade/Replacement Alternative (Proactive Approach)*

6.03.1 *Introduction*

In the Upgrade/Replacement Alternative, the majority of the Borough's sanitary sewer system would be replaced over the course of three phases. Due to the NJDOT's plans to resurface Central Avenue (N. J. State Highway 35) in 2008/2009, along with the anticipated codified seven (7) year moratorium period after such improvements are completed, the Borough has designated Phase I as the replacement of the existing sanitary sewer lines within the Central Avenue corridor. Phase II would consist of replacing the existing sanitary sewer system on the bay side of the Borough (west of Central Avenue) and Phase III would consist of the replacement of the sanitary sewer system on the ocean side of the Borough (east of Central Avenue).

As previously stated, over the course of the last decade, the Borough has replaced various sections of pipe in response to breaks and/or collapses, and in anticipation of scheduled roadway improvements. The sections of the system that were recently replaced (which were constructed with PVC pipe and pre-cast concrete manholes) will remain in place. Contingent on the findings from a closed circuit television inspection, the Borough's existing 18"/20" gravity interceptor (located along Bayview and Barnegat Avenues) would also remain in place. The proposed upgrade/replacement would be designed in

such a way so as to incorporate the sections that will remain into the overall plan for the replaced sanitary sewer system.

Overall, it is anticipated that the project would consist of the upgrading/replacement of approximately 77% (63,000 linear feet of a total of approx. 81,500 linear feet) of the existing sanitary sewer pipe throughout the Borough.

6.03.2 *Economics*

As discussed earlier, the replacement of the Borough's sanitary sewer infrastructure will take place over three phases. Preliminary construction cost estimates (excluding engineering design and construction administration, permitting, legal costs, and financial consultation) for each phase of work are given below:

Phase I	$ 3,880,000
Phase II	$ 3,640,000
Phase III	$ 6,060,000

A further breakdown of the Engineer's Estimate of Probable Construction Costs is given in Appendix E of this report.

Please refer to Section 9.00 (Total Project Costs) of this report for a table outlining the total project costs (including preliminary/final design/permitting/bidding services/legal/ bond counsel/construction and administration).

A consideration that was not incorporated into the above evaluation, but one that is of major significance, is that of the reduction of extraneous flow into the sanitary sewer system. Once the above described improvements are installed, extraneous flows into the sanitary sewer system should decrease markedly, and the Borough would benefit significantly due to a reduction in wastewater treatment costs. If only 1/3 of the extraneous flow currently in the sanitary sewer system is due to leaking manholes and/or broken pipes (and the other 2/3 is due to faulty house connections and/or illicit sump pump and roof/floor/yard drain connections), the Borough would save approximately $100,000 per year for the treatment of extraneous flow. (It is likely that the reduction in extraneous flow would be substantially greater than 1/3.)

6.03.3 *Environmental Effects*

The Upgrade/Replacement Alternative will have an overall beneficial environmental impact since it will reduce SSOs and will maximize the conveyance of wastewater, thereby protecting water quality. The Upgrade/Replacement Alternative will also reduce the rainfall induced infiltration and inflow which is a main cause of many of the SSOs and back-ups, thus resulting in a substantial positive environmental impact.

The project will be specifically designed to limit, to the greatest extent possible, impacts to the existing environment. The proposed sanitary sewer system will be installed within existing developed roadways, therefore minimizing impacts to natural undisturbed ecosystems. In addition, the sanitary sewer pipes will be installed underground. All work will be performed in such a way as to minimize permanent negative impacts to the

surrounding environment. Post construction problems will be avoided by use of proper backfill material and proper compaction techniques.

Excavated materials will be deposited in trucks and hauled from the site immediately. All imported construction materials will be stored at the site on an as-needed basis to minimize the possibility of accidental spills and reduce exposure to possible leaching conditions.

The width of all trenches for installation of the proposed sanitary sewer replacement pipe shall be limited to the minimum necessary. Upon installation, trenches will be backfilled to the pre-excavation ground elevation and the pavement and or sidewalk will be restored. It is not anticipated that any proposed sewer pipe will be installed in grass or lawn areas, but should this occur, trenches will be backfilled to the pre-excavation ground elevation and shall be planted with native species vegetation. It is not anticipated that any sanitary sewer replacement piping/manholes/laterals will be installed on private property.

The only negative impacts anticipated as a result of the project will occur during construction, but will be limited to short term dust and construction noise. These temporary impacts will, however, be offset by the improvements in water quality.

In summary, the Upgrade/Replacement Alternative will consist of the replacement of the existing sanitary sewer infrastructure, will not create a new discharge, will not increase wastewater flow and will not impact the level of wastewater treatment. As all of the work proposed under this alternative will be performed within existing right-of-ways that have already been disturbed, there will not be any adverse environmental or cultural resources impact.

6.03.4 *Implementation*

Implementation of the Proactive Approach is predicated on the Borough's willingness to plan and expend the administrative and funding resources necessary to execute the work. As discussed in the Project Phasing section of this report, the implementation plan for the replacement/upgrade of the sanitary sewer system calls for a phased approach for planning and preliminary/final engineering design, followed by loan authorization, sequenced bonding, public bidding of the project, and construction.

6.03.5 *Conclusion*

The effectiveness of the Upgrade/Replacement Alternative is that a newly constructed sanitary sewer system should alleviate, for many years to come, any collapses, leaks or major failures that could lead to the potential endangerment of the health and welfare of the community and environment. The Borough would benefit financially from this alternative, as there will be a marked reduction in extraneous flows within the system. Therefore the cost of wastewater treatment would be reduced. There would also be a decrease in the required day-to-day maintenance of a newly constructed system.

An indirect economic benefit to the OCUA from this alternative would be an energy savings in pump run time, as more of the Borough's wastewater flow would be conveyed

directly into the OCUA interceptor, resulting in less flow reaching the OCUA pump station.

For all of the above reasons, we recommend that the Borough proceed with the Upgrade/ Replacement Alternative, which would allow the Borough to replace the existing sanitary sewer system in an efficient, managed, and phased approach.

7.00 DESIGN CRITERIA - SANITARY SEWER SYSTEM

7.01 *Introduction*

As stated previously, over the past 10-12 years the Borough has responded to an increasing number of reports of clogs, breaks and collapses in its sanitary sewer system. The main cause of the breaks and collapses is the age of the existing piping, manholes and laterals. As the bulk of the sanitary sewer system throughout the Borough is over 80 years old, it is evident that these system components have reached the end of their useful service life.

7.02 *Proposed Design Criteria*

The proposed sanitary sewer system will be pursuant to best wastewater practices, in accordance with the most recent rules and regulations of the New Jersey Department of Environmental Protection (NJDEP). The proposed pipe material will be polyvinyl chloride (PVC) SDR-35 gasketed pipe, except for areas of shallow burial, where high density polyethylene (HDPE) or ductile iron pipe (DIP) will be specified. Manholes will be specified as pre-cast concrete riser sections, with butyl gaskets required between riser sections to prevent the infiltration of groundwater. Connections to the OCUA manholes shall be made in conformance with the OCUA's rules and regulations and their standard details (Appendix I of this report).

Pipe slopes for eight (8") inch PVC pipe will be a minimum of 0.3%, eight (8") inch DIP will be minimum of 0.4%, and ten (10") inch PVC pipe will be minimum of 0.2%, as per NJDEP design criteria for minimum allowable hydraulic slope (to allow for self-cleaning velocity of two (2') feet per second (fps)). Capacities of proposed pipe will be calculated as twice the average flow flowing in a half full pipe. (Conceptual pipe runs, lengths, and pipe sizing are shown on the Conceptual Plans contained in Appendix C of this report.)

The following assumptions were made in preparing the pipe sizing:

- Wastewater flow from all housing units was estimated at 300 gallons per day (gpd) per housing unit (based on NJDEP criteria).
- Enrollment at the elementary school was based on a student population of 218, based on U.S. Census 2000 data:
    - Total population 2263 - 107 (under age of 5) - 1938 (over age of 18).
- Wastewater flow from the elementary school was estimated at 25 gallons per day (gpd) per student (based on NJDEP criteria).
- Wastewater flow for churches was based on seating capacity of 1,000.
- Wastewater flow for churches was based on 3 gpd per seat (based on NJDEP criteria).
- Wastewater flow for commercial buildings (stores and offices) was based on 0.1 gpd per square foot of building footprint (based on NJDEP criteria).
- Wastewater flow for restaurants was based on 35 gpd per seat (based on NJDEP criteria).
- Manning's value (friction factor in pipe) for use in Manning's Equation to compute capacity of flow in pipes for PVC pipe was assumed to be 0.010.

- Manning's value (friction factor in pipe) for use in Manning's Equation to compute capacity of flow in pipes for DIP was assumed to be 0.013.

Design computations for each of the "mini" drainage basins, as well a Pipe Sizing spreadsheet for pipe sizing and slope, are given in Appendix D of this report.

7.03 *Conceptual Design*

7.03.1 *Phase I - Sanitary Sewer Replacement - Central Avenue (N.J. State Highway 35)*

Due to the impending NJDOT resurfacing of Central Avenue, it is imperative that the Borough act immediately to facilitate the planning, design and construction of the new sanitary sewer infrastructure within the Highway 35 corridor. Phase I encompasses the proposed improvements for this portion of the overall Upgrade/Replacement Project.

Phase I calls for the abandonment of the existing sanitary sewer pipes located within the Central Avenue corridor, and the replacement of these sewers with new PVC pipe located within the shoulders and sidewalk areas. The main advantage of relocating the majority of the Borough's sanitary sewer pipes out of the NJDOT's road corridor into the road shoulder/sidewalk areas is that it allows the Borough to maintain and service their sanitary sewer pipes without disturbing Central Avenue. It also provides the Borough with an opportunity to incorporate a "streetscape" concept for the walkway improvements through the center of the Borough.

Sanitary sewer lines will generally be designed along both sides of Central Avenue in order to service the residences and commercial buildings along this corridor without requiring extended lateral connections across Central Avenue. Sewer extensions (with a corresponding "doghouse" manhole) will be installed at each cross street in order to connect the existing branch sanitary sewer lines along the streets to the newly installed sewer line in Central Avenue. (The branch lines would then be upgraded/replaced at a later time as part of either Phase II or Phase III.) The upgraded/replaced sanitary sewer system will be designed as separate mini drainage basins in a "manifold" fashion, where five or six cross street branch sanitary sewer lines will be tied into a main sanitary sewer line along Central Avenue. Each mini drainage basin will tie directly into an OCUA manhole in order that the Borough's wastewater flow can be conveyed to the OCUA's gravity interceptor. (We have contacted representatives from the OCUA and have received verbal approval to tie the Borough's sanitary sewer lines directly into the OCUA's interceptor at the OCUA manholes via an inside drop connection.) Details of this connection are given in Appendix I of this report.

7.03.2 *Phase II - Sanitary Sewer Replacement - Bay Side*
Phase III - Sanitary Sewer Replacement - Ocean Side

It is anticipated that the sanitary sewer system upgrade/replacement construction would take place on the bay side (Phase II) following the improvements along Central Avenue (Phase I). The reasoning is that the bay side is the low lying side of the Borough, and is believed to be the source of the greater amount of extraneous flow. The ocean side

(Phase III) construction would then follow the bay side construction. However, as the design concepts for Phase II and Phase III are similar, they will be discussed together.

As stated previously, the Borough's former sewage pump station (Central Avenue and K Street) is no longer in existence. Therefore, there is no longer a need for all of the wastewater from the Borough's northern drainage area to be conveyed to this intersection. In order to reduce the size and burial depth necessary for a large interceptor, the design concept chosen was to divide the northern drainage area into "mini" drainage basins. These smaller drainage basins would be "manifolded" to a sewer line on Central Avenue (as discussed in the previous section) and would then flow by gravity directly into OCUA's interceptor. Five (5) new connection points to the OCUA interceptor are proposed. Including the existing connection on K Street, there would be six (6) mini drainage basins. As would be expected with smaller drainage basins, less wastewater flow would be collected; therefore smaller diameter pipe could be utilized for the conveyance of wastewater. Since there would be six (6) connection points to the OCUA interceptor (instead of one in the existing system) the need for a larger interceptor to collect and convey the flow from all of the sub drainage basins is eliminated. Shorter pipe runs would be required; therefore the pipes could be installed at shallower depths. This design concept eliminates the need for larger diameter pipes to be installed at deeper elevations, and will lead to a cost savings to the Borough in pipe size and excavation/burial depth and an overall decreased potential for infiltration.

Phase II calls for the replacement of existing sanitary sewer lines west of Central Avenue, Phase III plans call for the replacement of existing sanitary sewer lines east of Central Avenue. In the Borough's northern drainage area, cross street branch sanitary sewer lines will connect to the sanitary sewer lines installed under Phase I and will flow to the OCUA interceptor. In the southern drainage area, in particular south of 5th Avenue, there are no OCUA manholes for direct tie-in. New sanitary sewer lines are still proposed for the southern portion of the Borough, but the collected wastewater will flow to the west and will connect to the Borough's existing interceptor located on Bayview Avenue, with wastewater eventually flowing to the OCUA pump station. (Please refer to the Conceptual Plan given in Appendix C of this report for further clarification of the proposed sanitary sewer system.)

7.03.3 *Summary*

Upon completion of construction of all three phases, wastewater south of D Street and west of Central Avenue (bay side) will flow directly into the Borough's interceptor via individual cross street branch lines. Wastewater south of 5th Avenue and east of Central Avenue (ocean side) will flow to 7th Street, beneath Central Avenue, down 7th Street (bayside) and flow directly into the Borough's interceptor. This crossing will be constructed under Phase I and is the only proposed crossing under Central Avenue. Wastewater north of D Street (bayside) will flow directly into the OCUA interceptor via the existing K Street connection. Wastewater north of 6th Avenue (ocean side) will manifold into mini drainage basins (consisting of five to six streets each) and will flow directly into the OCUA interceptor. (Please refer to Appendix C for the Sanitary Sewer Conceptual Plan.)

As previously stated, the recently replaced sewer lines in the southern portion of the Borough (as indicated on the Conceptual Plan in Appendix C and as given on a spreadsheet in Appendix G of this report) and the Borough's interceptor along Bayview Avenue will remain in service.

8.00 REQUIRED PERMITTING

8.01 *Ocean County Utilities Authority (OCUA) (for Sanitary Sewer)*

Although there are technically no new residential or commercial sewer connections to the Borough's wastewater system, (and therefore no increase in wastewater flow) approval from OCUA will still be required for Phase I sewer improvements due to the fact that five (5) new direct connections will be made to the OCUA interceptor. The OCUA permit review and approval period normally takes up to 90 days; however the OCUA has been made aware of the impending project, and anticipate that the approval process would be abbreviated. The estimated application fee is **$2,250.00** which includes OCUA's review of the application, a direct connection inspection fee and a required deposit.

Submittals to the OCUA will be required under Phase II and Phase III as part of the NJDEP TWA permit application approval process (discussed below) but it is anticipated that the submittal to OCUA will be for a courtesy review only. (We have included a review fee of **$2,000** for Phase II and Phase III in the event that the OCUA requires a fee for this review.)

8.02 *New Jersey Department of Environmental Protection*

8.02.1 *Treatment Works Approval* (TWA) *Permit (for Sanitary Sewer)*

A TWA permit is typically not required for the repair or upgrade of a sanitary sewer line if said replacement pipe is the same diameter as the existing pipe, and is placed in the same location and at the same slope as the existing pipe. However, the conceptual design for all three phases calls for pipe replacements of different diameters, in different locations, and most likely at different slopes than the existing pipes. Therefore, a TWA permit from the NJDEP will be required for each phase of the proposed improvements.

In accordance with the proposed phasing plan, construction of the sanitary sewers will occur over three (3) phases. Phase I will include the replacement of sewers within the Route 35 corridor (Central Avenue). Phase II will include the replacement of the sewers within the western portion of the Borough (bay side) and Phase III will include the replacement of sewers along the eastern portion of the Borough (ocean side). Due to the construction phasing schedule, three (3) separate TWA applications will be required for submittal to the NJDEP, one (1) application per phase.

TWA applications are subject to the 90 Day Construction Rules pursuant to N.J.A.C. 7:1C. As such, the NJDEP has 90 calendar days after the application has been deemed administratively complete to either approve the application or to provide comments.

TWA application fees are calculated as follows:

1. Category 1 includes projects where the construction costs are greater than $1,000,000;
2. Category 2 includes projects where the construction costs are greater than $250,000 but are less than or equal to $1,000,000.
3. Category 3 includes projects where the construction costs are less than or equal to $250,000.

The estimated construction cost estimate for each of the phases of the sanitary sewer infrastructure upgrade is over $1,000,000.00. Therefore, each project will be classified as a Category 1 project.

The application fee for a Category 1 project is determined by the following formula:

Category 1 fee = 4P ($250,000) + 2P ($750,000) + P (construction cost - $1,000,000)

At the present time, P = 0.0040. Using this factor, the anticipated application fee for each phase of construction is given below:

Phase I

4(0.0040)(250,000) + 2(0.0040)($750,000) + 0.0040(3,880,000 - $1,000,000) =

$4,000 + 6,000 + 11,534 = **$21,520**

Phase II

4(0.0040)(250,000) + 2(0.0040)($750,000) + 0.0040(3,640,000 - $1,000,000) =

$4,000 + 6,000 + 11,534 = **$20,560**

Phase III

4(0.0040)(250,000) + 2(0.0040)($750,000) + 0.0040(6,060,000 - $1,000,000) =

$4,000 + 6,000 + 11,534 = **$30,240**

The application fees given above are intended for estimation purposes only. As the design of the improvements progresses, and the construction cost estimate is revised, the permit fee calculations will be adjusted accordingly.

If contaminated groundwater is encountered during trench dewatering (described below) a separate TWA permit may be required for approval to discharge the contaminated groundwater to OCUA for treatment (at a capacity greater than 8,000 gallons per day). Costs for the fees that would be required for this permit are not included in this report.

8.02.2 *Bureau of Water Systems and Well Permitting (BWS&WP) (Water System)*

A BWS&WP permit from the NJDEP will be required for each phase of this project since each phase involves the replacement/upgrade of 1,500 or more linear feet of water main without new connections or new demand.

In accordance with the proposed phasing plan, construction of the water distribution system will occur over three (3) phases. Phase I will include the replacement of water mains within the Route 35 corridor (Central Avenue). Phase II will include the replacement of the water mains along the western portion of the Borough (bayside) and

Phase III will include the replacement of sewers along the eastern portion of the Borough (ocean side). Due to the construction phasing schedule, three (3) separate BWS&WP applications will be required for submission to the NJDEP.

BWS&WP applications are not subject to the 90 Day Construction Rules. NJDEP reviews BWS&WP applications in the order in which they are received so that water allocation may be allotted fairly. Generally, BWS&WP applications are approved within four (4) to six (6) months. However, it should be noted that in certain instances, the approvals could take longer to obtain.

Pursuant to N.J.A.C. 7:10-15.3, the application review fee for the construction and/or modification of a public water system and/or bulk distribution system shall be determined as follows:

1. Step One: Multiply that part of the project construction cost that is:

   i. Less than or equal to $250,000 by 0.9 percent;
   ii. Between $250,001 and $1,000,000 by 0.6 percent; and
   iii. More than $1,000,000 by 0.3 percent.

2. Step Two: Sum the figures calculated under (a) 1 above to obtain the fee due.

The minimum and maximum permit application review fees which the Department will assess are $100 and $12,000, respectively.

The anticipated application fee for each phase of construction is given below:

Phase I

$250,000 * 0.9% = $ 2,250
$750,000 * 0.6% = $ 4,500
$1,552,000 * 0.3% = $ 4,656
TOTAL **$ 11,406**

Phase II

$250,000 * 0.9% = $ 2,250
$750,000 * 0.6% = $ 4,500
$3,516,000 * 0.3% = $ 4,656
TOTAL $ 17,298 (**$12,000** is maximum fee)

Phase II

$250,000 * 0.9% = $ 2,250
$750,000 * 0.6% = $ 4,500
$3,445,000 * 0.3% = $ 4,656
TOTAL $ 17,085 (**$12,000** is maximum fee)

The application fees given above are intended for estimation purposes only. As the design of the improvements progresses, and the construction cost estimate is revised, the permit fee calculations will be adjusted accordingly.

8.02.3 *New Jersey Pollutant Discharge Elimination System (NJPDES) Request for Authorization (RFA)*

As each phase of the project will have greater than one (1) acre of soil disturbance, a NJPDES RFA approval will be required from the State. Although the approval of this permit is issued by the State, the application will be submitted along with each OCSCD application (discussed below).

The fee for RFA approval for each phase of the project is expected to be **$300**.

8.02.4 *Bureau of Water Allocation - Temporary Dewatering Application*

This permit will be required for each phase of the project due to the fact that each phase will likely require dewatering of utility trenches for greater than 31 days in a calendar year during construction. The fee for each phase is expected to be **$6,985** which will permit a groundwater discharge up to 15.5 million gallons per month (MGM).

As stated previously, if contaminated groundwater is encountered during trench dewatering a separate TWA permit may be required for approval to discharge the contaminated groundwater OCUA (at a capacity greater than 8,000 gallons per day). Costs for the fees that would be required for this permit have not been included in this report.

8.02.5 *Stream Encroachment*

There are no non-tidally influenced water bodies within the Borough; therefore a Stream Encroachment permit will not be required for this project.

8.02.6 *Freshwater Wetlands/Tidelands*

As all work will be conducted within existing road right-of-ways that were previously disturbed, wetlands permits will not be required for this project.

8.03 *Coastal Area Facility Review Act (CAFRA)*

A jurisdictional determination request was submitted to NJDEP showing the anticipated work for all three phases of the water and sewer improvements, and it has been determined that a CAFRA Permit is not required for this project.

8.04 *New Jersey Department of Transportation (NJDOT) Road Opening Permit*

A road opening permit will be required from NJDOT for work in and adjacent to Route 35 (Central Avenue - Phase I). The estimated application fee for Phase I is **$900**.

It should be noted that based on our meeting with the NJDOT, the NJDOT anticipates that the existing concrete roadway slabs will remain in place during the resurfacing of Route 35. (The concrete slabs will be inspected and will be rehabilitated in place as necessary.) The NJDOT design engineer indicated that, in order to install the cross connections to the OCUA interceptor manholes, it may be permissible to cross the concrete roadway slab along the existing joints and then repair the slab through doweling. (The slabs are 40 feet in length.)

NJDOT permit applications will not be required for Phase II or Phase III.

8.05 *Ocean County - Road Opening*

There is no work anticipated during Phase I that Ocean Avenue, Boulevard and several minor County Roads will require a County Road Opening permit. During Phase II and work will occur within Bayview Avenue and Ocean Avenue which are County owned and maintained roadways; therefore a road opening permit will be required.

The Borough is exempt from application fees to the County.

8.06 *Soil Conservation District - Soil Erosion and Sediment Control Certification*

An application to the Ocean County Soil Conservation District (OCSCD) for a Soil Erosion and Sediment Control Certification will be required for each phase of the project since soil disturbance will be greater than 5,000 square feet (s.f.) for each phase.

In accordance with the proposed phasing plan, construction of the water distribution system and the sanitary sewers will occur over three (3) phases. Phase I will include the replacement of water mains and sewers within the Route 35 corridor (Central Avenue). Phase II will include the replacement of the water mains and sewers within the western portion of the Borough (bay side) and Phase III will include the replacement of the water mains and sewers along the eastern portion of the Borough (ocean side). Due to the construction phasing schedule, three (3) separate Soil Erosion Control Certification applications will be required for submittal to the Ocean County Soil Conservation District, one (1) application per phase.

OCSCD will have thirty (30) days to review the Soil Erosion and Sediment Control Certification application to either approve the application or to provide comments.

The OCSCD fee sheet (effective, March 11, 2003) is summarized below:

Other Land Disturbances

Including but not limited to site plans, commercial, industrial, hotels, motels, parking lots, life-care facilities, nursing homes, parks, golf courses, roads, drainage, utilities, public construction, schools, land grading over one (1) acre, landfills, bulkheading. (Partial acreage rounded off to nearest whole acre.)

Disturbance	Certification Fee	+	Inspection/Enforcement Fee
5,000 s.f. to .2 acre	$525.00	+	$400.00
2 to .5 acre	$550.00	+	$500.00
.5 to 1 acre	$600.00	+	$750.00
2 to 3 acres	$750.00	+	$350.00/acre
4 to 10 acres	$1,000.00	+	$200.00/acre
11 acres and over	$2,500.00	+	$140.00/acre

According to the above schedule, the application fees would be calculated as follows:

For Phase I the estimated disturbance is 3 acres. Therefore the estimated application fee will be $750 + ($350) (3) = **$1,800.**

For Phase II the estimated disturbance is 3 acres. Therefore the estimated application fee will be $750 + ($350) (3) = **$1,800.**

For Phase III the estimated disturbance is 5 acres. Therefore the estimated application fee will be $1,000 + ($200) (5) = **$2,000.**

The application fees given above are intended for estimation purposes only. As the design of the improvements progresses, and the construction cost opinion is revised, the permit fee calculation will be adjusted accordingly.

8.07 *Local Approvals*

As the proposed work would be performed within the Borough on behalf of the Borough, we anticipate that any local permits (planning board/road opening, etc.) would be a courtesy review and that the permit fees would be waived.

Anticipated Application Fees

Application	Application Fee Phase I	Application Fee Phase II	Application Fee Phase III
OCUA	$2,250	$2,000	$2,000
NJDEP - TWA	$21,520	$20,560	$30,240
NJDEP - BWS&WP	$11,406	$12,000	$12,000
NJDEP - RFA	$300	$300	$300
NJDEP - Dewatering	$6,985	$6,985	$6,985
NJDEP - Stream Encroach	$0	$0	$0
NJDEP - Fresh Wetlands	$0	$0	$0
NJDEP - CAFRA	$0	$0	$0
NJDOT	$900	$900	$900
County Road Opening	$0	$0	$0
OCSCD	$1,800	$1,800	$2,000
TOTALS	**$45,161**	**$44,545**	**$54,425**

Anticipated Application Submittal Schedule - Phase I

Application	Estimated Submittal to Agency	Estimated Approval
OCUA	January 2007	March 2007
NJDEP - TWA	March 2007 (to NJDEP)	July 2007
NJDEP - BWS&WP	January 2007 (to NJDEP)	June 2007
NJDEP - RFA	January 2007	March 2007
NJDEP - Dewatering	January 2007	June 2007
NJDEP - Stream Encroach	Not applicable	Not applicable
NJDEP - Fresh Wetlands	Not applicable	Not applicable
NJDEP - CAFRA	Not applicable	Not applicable
NJDOT	February 2007	May 2007
County Road Opening	Not applicable	Not applicable
OCSCD	January 2007	March 2007

9.00 TOTAL PROJECT COSTS

The following table contains an estimate for the costs associated with construction, preliminary/final design, permitting fees, bidding services, legal and bond consultation and construction administration for the project, broken down for each of the three (3) proposed phases:

Engineer's Opinion of Probable Construction Costs				
Construction - Potable Water	$2,550,000	$4,515,000	$5,444,000	**$12,509,000**
Construction - Sanitary Sewer	$3,880,000	$3,640,000	$6,060,000	**$13,580,000**
TOTAL CONSTRUCTION	**$6,430,000**	**$8,155,000**	**$11,504,000**	**$26,089,000**
Pavement - Curb to Curb	$0			**$0**
Design/Permitting/Bidding/Construction Administrative/Legal Costs				
Preliminary/Final Design	$326,000	$422,000	$608,000	**$1,356,000**
Bidding Services	$31,000	$31,000	$31,000	**$93,000**
Permitting Fees	$45,161	$44,545	$54,425	**$144,131**
Legal Services (1%)	$64,300	$81,550	$115,040	**$260,890**
Bond Counsel (0.5%)	$32,150	$40,775	$57,520	**$130,445**
Construction Management	$291,750	$370,000	$522,000	**$1,183,750**
TOTAL DESIGN/ADMIN COSTS	**$790,361**	**$989,870**	**$1,387,985**	**$3,168,216**
TOTAL PROJECT COST	**$7,220,361**	**$9,144,870**	**$12,891,985**	**$29,257,216**

The associated project costs are estimated for Phase I at $7,220,361, Phase II at $9,144,870, and Phase at III $12,891,985. A breakdown of the engineer's estimateof probable construction costs for the project, by phase, is given in Appendix E of this report. (All costs are given in 2006 dollars.)

It should be noted that the Borough is currently 95% - 99% built out, therefore it is not expected that the either the water distribution system or the sanitary sewer system will require expansion to service future customers.

10.00 RECOMMENDATIONS

10.01 *Water Distribution System*

Per the Alternative Analysis section of this report, it is our recommendation that the Borough proceed with the Upgrade/Replacement Alternative (Proactive Approach) rather than the No Action Alternative (Reactive Approach). Evidence of pipe material corrosion due to shallow burial depths, alternating loading, and a natural high groundwater table has lead to a consistent pattern of water main breaks that is expected to increase in frequency in the future. Besides the degradation of the physical condition of the transmission/distribution water infrastructure, the No Action Alternative does not solve the problems associated with unaccounted-for water due to leakage (and thereby over-pumping) or the systems overall inadequacy to provide needed fire flow to all of the Borough's properties. Economically, the Upgrade/Replacement Alternative is more cost efficient than the No Action Alternative when considering the mitigation of aquifer over-pumping, additional annual insurance premiums, and high costs of emergency repair work during future main breaks. For the above reasons, the Upgrade/Replacement Alternative is recommended to address all major water concerns regarding system performance and robustness.

We recommend that the Borough consider the installation of polyethylene encasement (PE wrap) on all proposed water main. PE wrap, when installed properly, is an economical and effective method of corrosion protection for ductile iron pipe and fittings installed in aggressive soils and groundwater.

Per the Borough's Water Department, it is recommended that all domestic and commercial services that require replacement be evaluated to determine the adequacy of their size. All services that require so shall be upgraded to appropriate diameters.

We recommend that during Phase I (Route 35 Corridor) of the design and construction stages, the water main is replaced beyond (both north and south) the Route 35 right-of-way. Therefore, future water main replacements (whether they be future phases or under emergency repairs) shall not violate the Department of Transportation's seven (7) year moratorium period on Route 35.

10.02 *Sanitary Sewer System*

As discussed in the Alternative Analysis section of this report, the No Action Alternative (Reactive Approach) will not solve the problems associated with the aging sanitary sewer system. The No Action Alternative would leave the Borough with a failing system, whose condition will only worsen over time. Therefore, it is our recommendation that the Borough incorporate the Upgrade/Replacement Alternative.

As the interceptor along Bayview Avenue is the backbone for the conveyance of wastewater within the southern portion of the Borough, and since it is a deep sewer line that would be costly to replace, we recommend that the Borough consider performing a closed circuit TV inspection of the interceptor to determine its condition. If the interceptor is found to contain leaks or breaks, we would recommend that consideration

be given to install a cured-in-place liner within the interceptor, or spot repair the interceptor as necessary in order to maintain its structural integrity and functionality.

As infiltration is evident within the manholes along the interceptor, we recommend that the Borough rehabilitate these manholes with either a shotcrete or plastic liner.

We recommend that the Borough uncover any paved over or buried manhole covers, so they can be accessed and inspected.

The Borough may wish to consider repairing major infiltration issues immediately, as noted on the Conceptual Plan. The Borough should also investigate the cause of the surcharged condition within the manholes 36A and 228 in order to perform the necessary repair.

We recommend that the Borough request the installation of tide gates along the NJDOT and County outfalls along the bay side, to prevent tidal waters from backing up into the streets, and subsequently into the sanitary sewer system, either directly through manhole covers, or underneath the pavement and through gaps in the manhole casting/wall interface.

It must be pointed out that once the sanitary sewer system is upgraded/replaced, significant inflow/infiltration may still be present in the system, due to broken house service connections, or due to illicit sump pumps and/or roof/floor/yard drains connections into the system. We recommend that the Borough perform smoke testing of its system to determine illicit sources of inflow/infiltration and require the appropriate home owners or business owners to disconnect them from the sanitary sewer system.

APPENDIX A

WATER DISTRIBUTION SYSTEM
PROPOSED PHASES

BOROUGH OF SEASIDE PARK
WATER DISTRIBUTION SYSTEM
PROPOSED PHASES

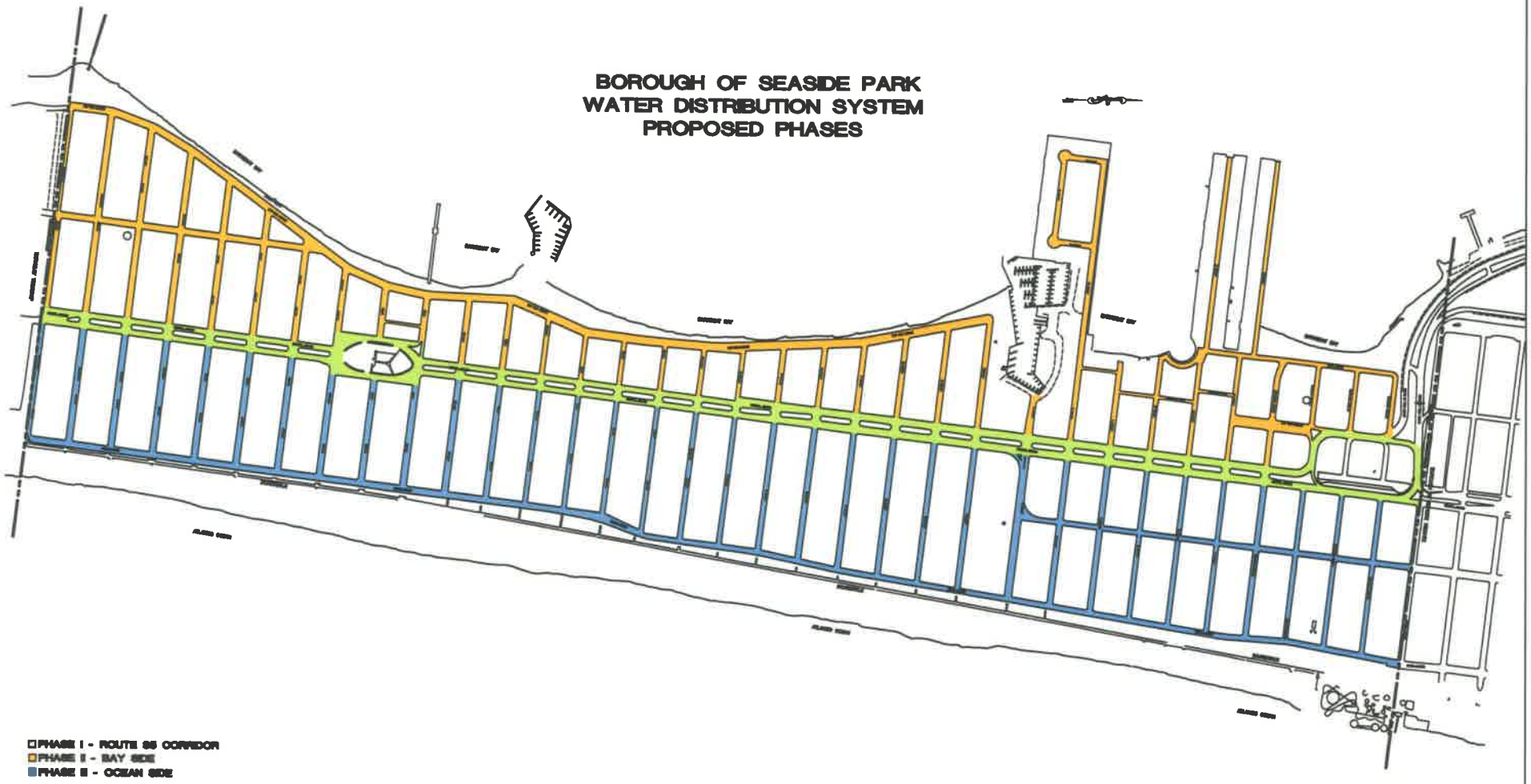

ROBERT D. FORSYTH
PROFESSIONAL ENGINEER, N.J. LIC. No. 33343

SCHOOR DEPALMA
Engineers and Consultants

300 STATE HIGHWAY NO.
P.O. BOX 500
MANALAPAN, NJ 07726
TEL (732)577-2000
FAX (732)577-2004

WATER DISTRIBUTION SYSTEM - PHASES I, II, AND III
BOROUGH OF SEASIDE PARK
FEASIBILITY STUDY / CONCEPTUAL PLAN

BOROUGH OF SEASIDE PARK OCEAN COUNTY NEW JERSEY

SCHOOR DEPALMA
1 of 1

BOROUGH OF SEASIDE PARK
WATER DISTRIBUTION SYSTEM
PROPOSED PHASES

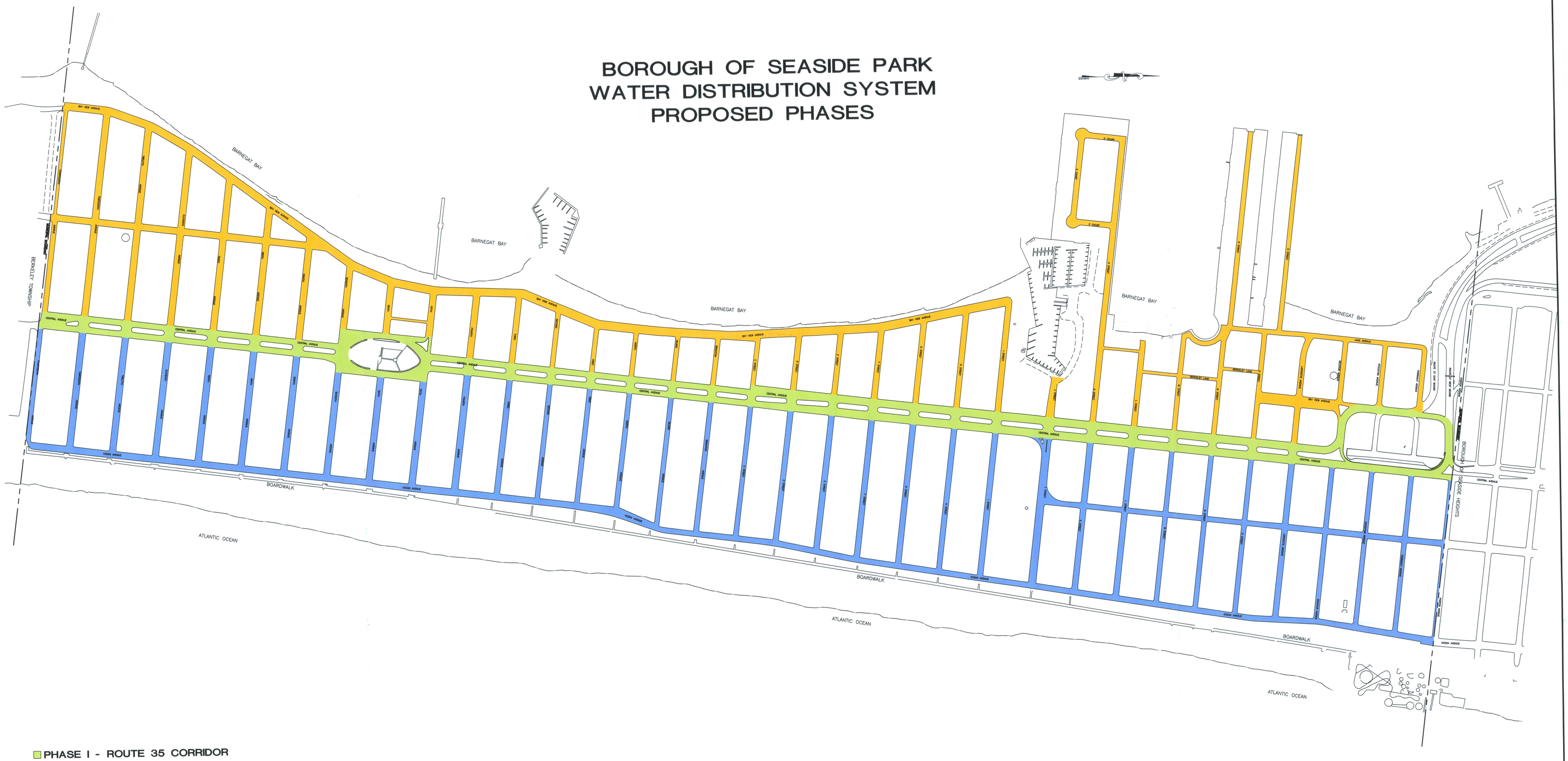

REVISION NO.	DATE	REVISION

—NOTICE—

THIS DRAWING AND ALL INFORMATION CONTAINED HEREIN IS AUTHORIZED FOR USE ONLY BY THE PARTY FOR WHOM THE WORK WAS CONTRACTED OR TO WHOM IT IS CERTIFIED.

THIS DRAWING MAY NOT BE COPIED, REUSED, DISCLOSED, DISTRIBUTED OR RELIED UPON FOR ANY OTHER PURPOSE WITHOUT THE WRITTEN CONSENT OF SCHOOR DEPALMA INC.

250 0 250 500
GRAPHIC SCALE IN FEET

ROBERT D. FORSYTH
PROFESSIONAL ENGINEER, N.J. LIC. No. GE33432

SCHOOR DEPALMA
Engineers and Consultants
Cert. Of Authorization 24GA27926200
NEW JERSEY • PENNSYLVANIA • NEW YORK • FLORIDA • ARIZONA • MARYLAND
DAMIANO LONG • a division of SCHOOR DEPALMA

200 STATE HIGHWAY NINE
P.O. BOX 900
MANALAPAN, NJ 07726
TEL (732)577-9000
FAX (732)577-9888

WATER DISTRIBUTION SYSTEM - PHASES I, II, AND III
BOROUGH OF SEASIDE PARK
FEASIBILITY STUDY / CONCEPTUAL PLAN

BOROUGH OF SEASIDE PARK OCEAN COUNTY NEW JERSEY

PROJECT NO. 06 03661 01	DATE 10/02/06
DRAWN BY MLN/AT	DESIGNED BY PKC
SCALE 1"=250'	CHECKED BY
SCHOOR DEPALMA	
SHEET NO. 1 of 1	

APPENDIX B

SANITARY SEWER SYSTEM
PROPOSED PHASES

BOROUGH OF SEASIDE PARK
SANITARY SEWER SYSTEM
PROPOSED PHASES

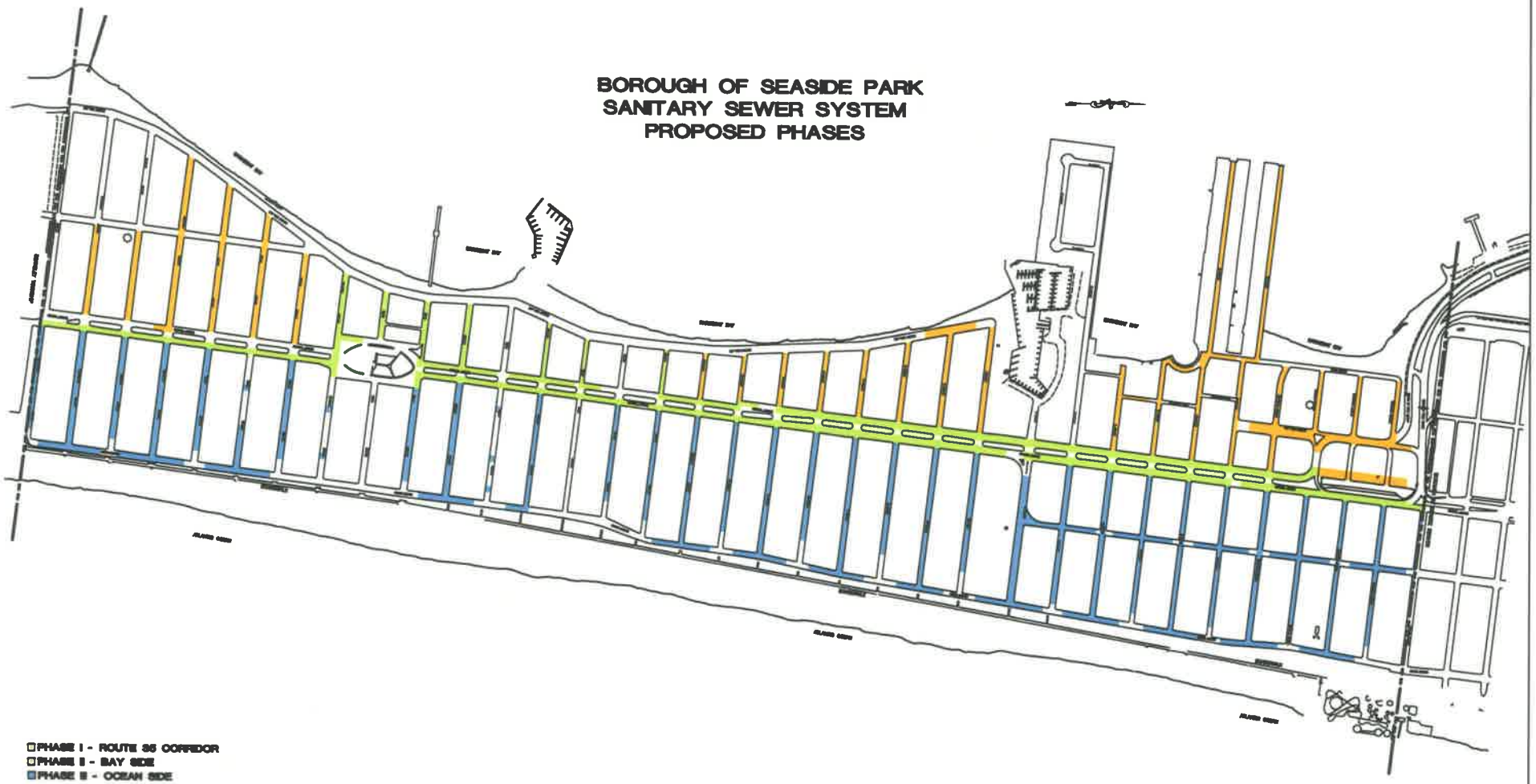

ROBERT D. FORSYTH
PROFESSIONAL ENGINEER, N.J. LIC. No. 6239432

SCHOOR DEPALMA
Engineers and Consultants

300 STATE HIGHWAY 166
P.O. BOX 500
MANALAPAN, NJ 07726
TEL (732)577-2220
FAX (732)577-0666

SANITARY SEWER SYSTEM - PHASES I, II, AND III
BOROUGH OF SEASIDE PARK
FEASIBILITY STUDY / CONCEPTUAL PLAN

BOROUGH OF SEASIDE PARK OCEAN COUNTY NEW JERSEY

SCHOOR DEPALMA
1 of 1

BOROUGH OF SEASIDE PARK
SANITARY SEWER SYSTEM
PROPOSED PHASES

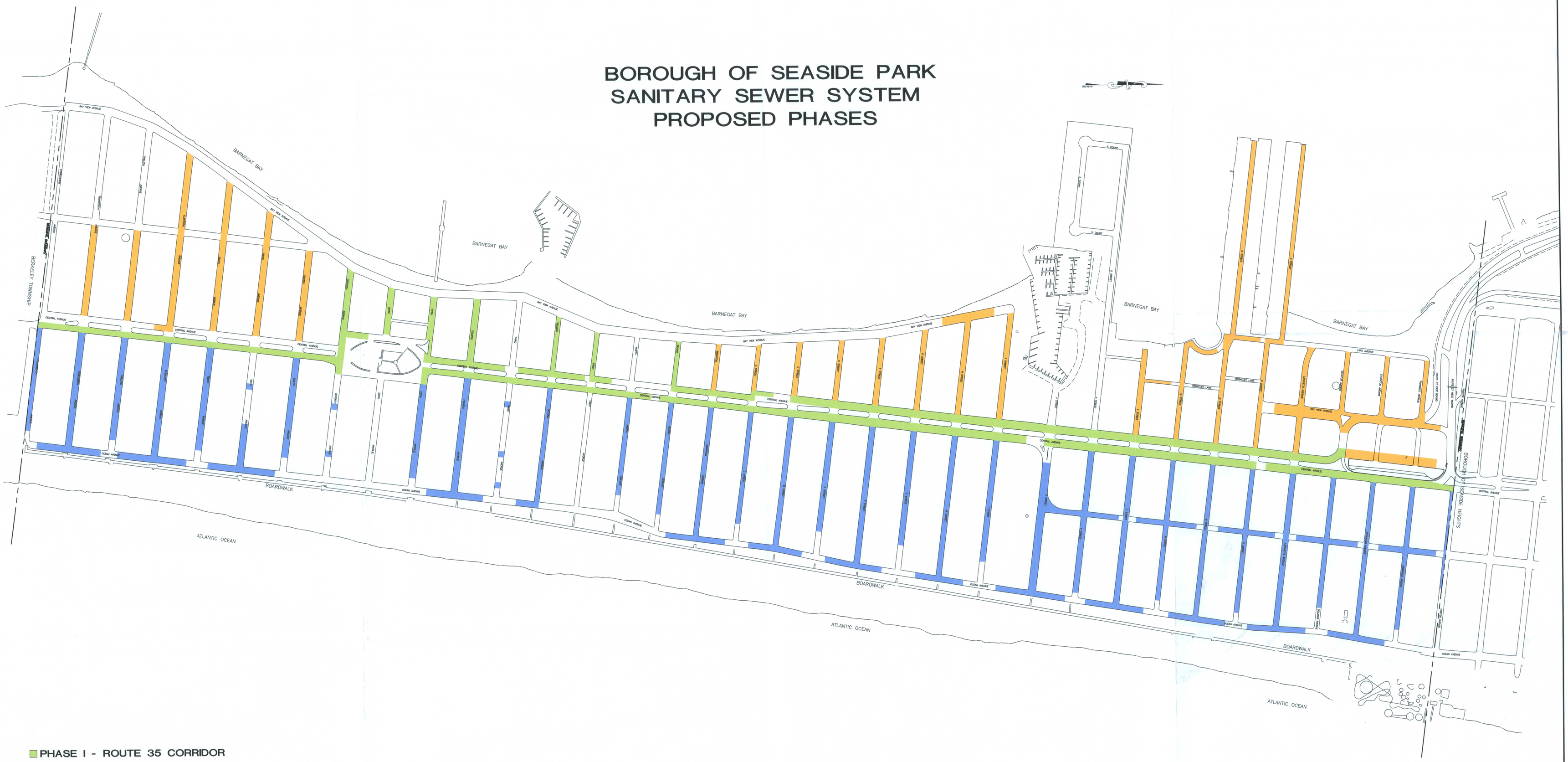

REVISION NO.	DATE	REVISION

—NOTICE—

THIS DRAWING AND ALL INFORMATION CONTAINED HEREIN IS AUTHORIZED FOR USE ONLY BY THE PARTY FOR WHOM THE WORK WAS CONTRACTED OR TO WHOM IT IS CERTIFIED.

THIS DRAWING MAY NOT BE COPIED, REUSED, DISCLOSED, DISTRIBUTED OR RELIED UPON FOR ANY OTHER PURPOSE WITHOUT THE WRITTEN CONSENT OF SCHOOR DEPALMA INC.

250 0 250 500
GRAPHIC SCALE IN FEET

ROBERT D. FORSYTH
PROFESSIONAL ENGINEER, N.J. LIC. No. GE33432

SCHOOR DEPALMA
Engineers and Consultants
Cert. Of Authorization 24GA27926200
NEW JERSEY • PENNSYLVANIA • NEW YORK • FLORIDA • ARIZONA • MARYLAND
DAMIANO LONG • a division of SCHOOR DEPALMA

200 STATE HIGHWAY NINE
P.O. BOX 900
MANALAPAN, NJ 07726
TEL (732)577-9000
FAX (732)577-9888

SANITARY SEWER SYSTEM - PHASES I, II, AND III
BOROUGH OF SEASIDE PARK
FEASIBILITY STUDY / CONCEPTUAL PLAN

BOROUGH OF SEASIDE PARK OCEAN COUNTY NEW JERSEY

PROJECT NO. 06 03661 01	DATE 10/02/06
DRAWN BY MLN/AT	DESIGNED BY JFM
SCALE 1"=250'	CHECKED BY
SCHOOR DEPALMA	
SHEET NO. 1 of 1	

User: mmann
Date: 10/02/2006 1:24 PM
W:\Projects\03661\sewer-phasing.dwg 24X11 E-size
E-size.dwt

APPENDIX C

SANITARY SEWER SYSTEM CONCEPTUAL PLAN

100 0 100 200
GRAPHIC SCALE IN FEET

ROBERT D. FORSYTH
PROFESSIONAL ENGINEER, N.J. LIC. No. GE33432

SCHOOR DEPALMA
Engineers and Consultants
Cert. Of Authorization 24GA27926200
NEW JERSEY • PENNSYLVANIA • NEW YORK • FLORIDA • ARIZONA • MARYLAND
DAMIANO LONG • a division of SCHOOR DEPALMA
200 STATE HIGHWAY NINE
P.O. BOX 900
MANALAPAN, NJ 07726
TEL (732)577-9000
FAX (732)577-9888

SANITARY SEWER - PHASES I, II AND III
SEASIDE PARK
FEASIBILITY STUDY / CONCEPTUAL PLAN

BOROUGH OF SEASIDE PARK OCEAN COUNTY NEW JERSEY

PROJECT NO	060366101
DATE	09/22/06
DRAWN BY	MLN
DESIGNED BY	JFM
SCALE	1" = 100'
CHECKED BY	
SCHOOR DEPALMA	
SHEET NO.	1 of 3

REVISION NO.	DATE	REVISION

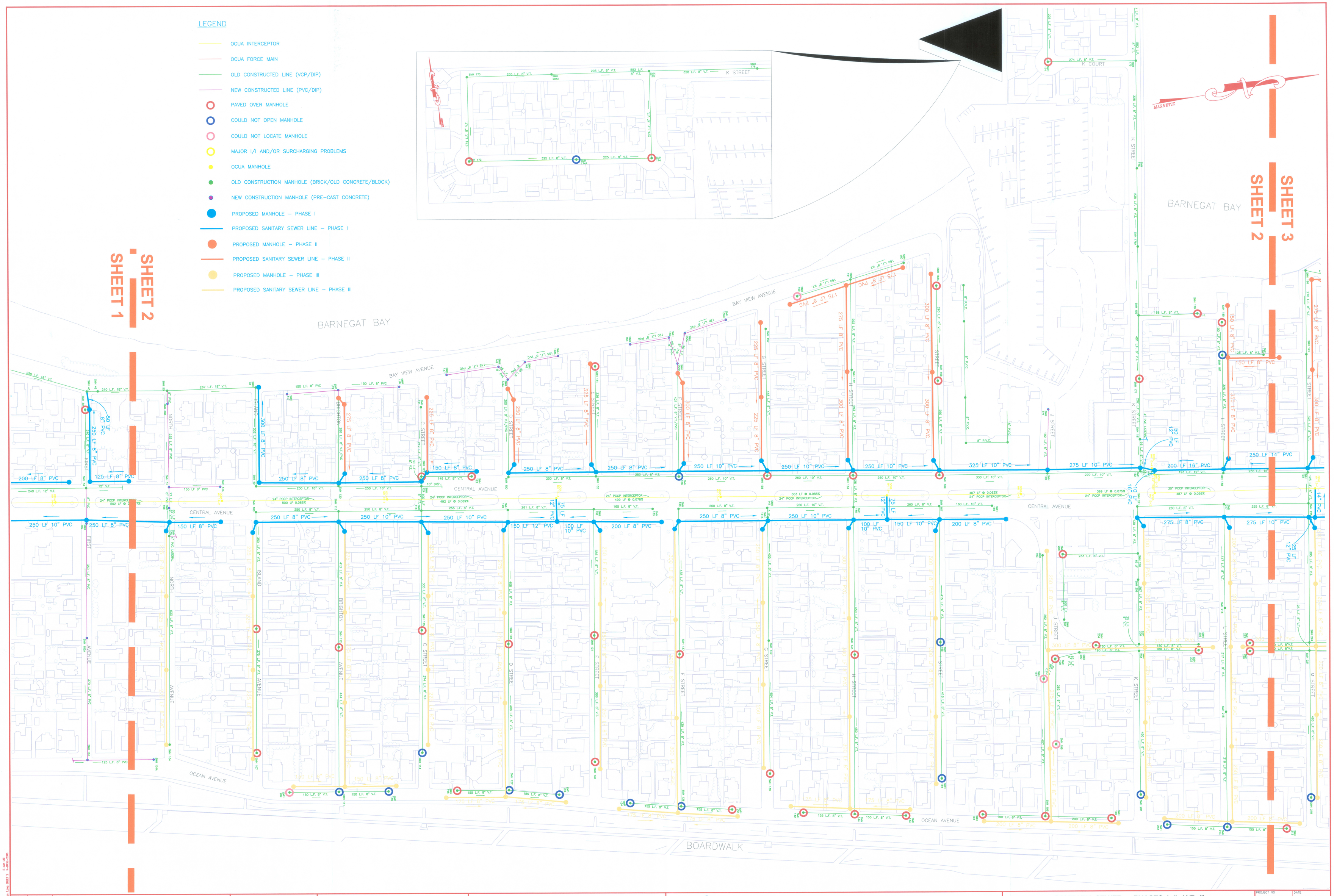

REVISION NO.	DATE	REVISION

–NOTICE–

THIS DRAWING AND ALL INFORMATION CONTAINED HEREIN IS AUTHORIZED FOR USE ONLY BY THE PARTY FOR WHOM THE WORK WAS CONTRACTED OR TO WHOM IT IS CERTIFIED.

THIS DRAWING MAY NOT BE COPIED, REUSED, DISCLOSED, DISTRIBUTED OR RELIED UPON FOR ANY OTHER PURPOSE WITHOUT THE WRITTEN CONSENT OF SCHOOR DEPALMA INC.

100 0 100 200
GRAPHIC SCALE IN FEET

ROBERT D. FORSYTH
PROFESSIONAL ENGINEER, N.J. LIC. No. GE33432

SCHOOR DEPALMA
Engineers and Consultants
Cert. Of Authorization 24GA27926200
NEW JERSEY • PENNSYLVANIA • NEW YORK • FLORIDA • ARIZONA • MARYLAND
DAMIANO LONG • a division of SCHOOR DEPALMA

200 STATE HIGHWAY NINE
P.O. BOX 900
MANALAPAN, NJ 07726
TEL (732)577-9000
FAX (732)577-9888

SANITARY SEWER - PHASES I, II AND III
SEASIDE PARK
FEASIBILITY STUDY / CONCEPTUAL DESIGN

BOROUGH OF SEASIDE PARK OCEAN COUNTY NEW JERSEY

PROJECT NO. 060366101	DATE 09/22/06
DRAWN BY MLN	DESIGNED BY JFM
SCALE 1" = 100'	CHECKED BY
SCHOOR DEPALMA	
SHEET NO. 2 of 3	

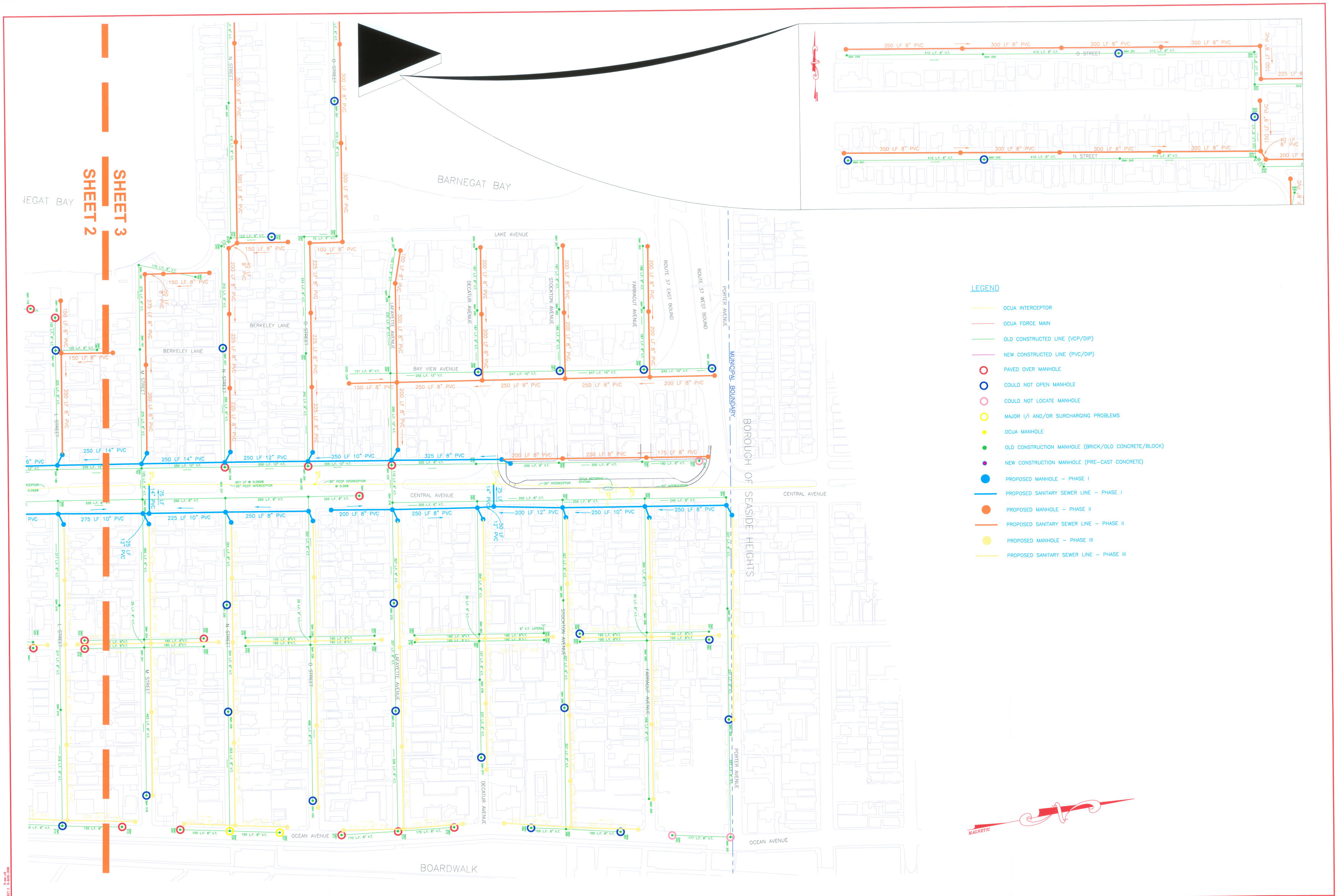

REVISION NO.	DATE	REVISION

100 0 100 200
GRAPHIC SCALE IN FEET

ROBERT D. FORSYTH
PROFESSIONAL ENGINEER, N.J. LIC. No. GE33432

SCHOOR DEPALMA
Engineers and Consultants
Cert. Of Authorization 24GA27926200
NEW JERSEY • PENNSYLVANIA • NEW YORK • FLORIDA • ARIZONA • MARYLAND
DAMIANO LONG • a division of SCHOOR DEPALMA

200 STATE HIGHWAY NINE
P.O. BOX 900
MANALAPAN, NJ 07726
TEL (732)577-9000
FAX (732)577-9888

SANITARY SEWER - PHASES I, II AND III
SEASIDE PARK
FEASIBILITY STUDY / CONCEPTUAL DESIGN

BOROUGH OF SEASIDE PARK OCEAN COUNTY NEW JERSEY

PROJECT NO. 060366101	DATE 09/22/06
DRAWN BY MLN	DESIGNED BY JFM
SCALE 1" = 100'	CHECKED BY
SCHOOR DEPALMA	
SHEET NO. 3 of 3	

APPENDIX D

SANITARY SEWER PIPE SIZING
CONCEPTUAL DESIGN

BOROUGH OF SEASIDE PARK
FEASIBILITY STUDY / CONCEPTUAL PLAN
WATER DISTRIBUTION AND SANITARY SEWER IMPROVEMENTS
WATER CONSUMPTION ESTIMATE / PIPE SIZING

Prepared September 19, 2006

NJDEP DESIGN CRITERIA (N.J.A.C. 7:14A-23.3-a)

RESIDENTIAL DWELLING 3 BDRM OR LARGER (gpd)	SCHOOLS W/ CAFÉ., SHOWER AND LABS (gpd/student)	STORES AND OFFICES (gpd/sq. ft.)	RESTAURANTS - AVERAGE (gpd/seat)	CHURCHES (gpd/seat)
300	25	0.10	35	3

BASIN 1

LOCATION	STARTING MANHOLE	ENDING MANHOLE	SEGMENT	RESIDENTIAL DWELLINGS	STORES / OFFICES	SCHOOLS	RESTAURANTS	CHURCHES	TOTAL FLOW (gpd)	MIN. PIPE DIA. (in)	PROPOSED PIPE DIA. (in)
TWELFTH AVENUE	18	9	1-1	0	0	0	0	0	186,920	22.60	REMAINING (20")
BARNEGAT AVENUE	24	18	1-2	4	1	0	0	0	159,665	21.30	REMAINING (20")
ELEVENTH AVENUE	23	24	1-3	12	0	0	0	0	3,600	3.98	8
ELEVENTH AVENUE	20A	24	1-4	20	1	0	0	0	6,300	4.91	8
BARNEGAT AVENUE	27	24	1-5	2	0	0	0	0	148,390	20.72	REMAINING (20")
BARNEGAT AVENUE	30	27	1-6	3	0	0	0	0	137,590	20.14	REMAINING (20")
TENTH AVENUE	26	27	1-7	6	0	0	0	0	3,000	3.72	8
BAY VIEW AVENUE	26B	26	1-8	2	0	0	0	0	600	2.03	REMAINING (8")
BAY VIEW AVENUE	26A	26	1-9	2	0	0	0	0	600	2.03	REMAINING (8")
TENTH AVENUE	25	27	1-10	24	0	0	0	0	7,200	5.16	8
NINTH AVENUE	30A	30	1-11	3	0	0	0	0	900	2.37	8
NINTH AVENUE	28	30	1-12	19	0	0	0	0	5,700	4.73	8
BARNEGAT AVENUE	32	30	1-13	3	0	0	0	0	130,090	19.72	REMAINING (20")
EIGHTH AVENUE	31	32	1-14	28	0	0	0	0	8,400	5.47	8
BAY VIEW AVENUE	33	32	1-15	1	0	0	0	0	120,790	19.18	REMAINING (20")
BAY VIEW AVENUE	38	33	1-16	2	0	0	0	0	120,490	19.16	REMAINING (20")
SEVENTH AVENUE	35	38	1-17	20	1	0	0	0	74,600	13.39	14
CENTRAL AVENUE	37A	37	1-18	1	0	0	0	0	300	1.57	8
BAY VIEW AVENUE	39	38	1-19	2	0	0	0	0	45,290	12.37	REMAINING (18")
BAY VIEW AVENUE	40	39	1-20	2	0	0	0	0	37,790	11.55	REMAINING (18")
SIXTH AVENUE	62A	39	1-21	23	0	0	0	0	6,900	5.08	8
BAY VIEW AVENUE	42	40	1-22	2	0	0	0	0	35,090	11.24	REMAINING (18")
FIFTH AVENUE	59A	40	1-23	7	0	0	0	0	2,100	3.25	8
BAY VIEW AVENUE	43	42	1-24	2	0	0	0	0	26,400	10.10	REMAINING (18")
FOURTH STREET	58	42	1-25	5	0	0	0	0	8,090	5.39	8
CENTRAL AVENUE	59B	58	1-26	2	1	0	0	0	840	2.31	8
CENTRAL AVENUE	58A	58	1-27	1	0	1	0	0	5,750	4.74	8
BAY VIEW AVENUE	44	43	1-28	2	0	0	0	0	23,400	9.65	REMAINING (18")
THIRD AVENUE	57A	43	1-29	8	0	0	0	0	2,400	3.42	8

LOCATION	STARTING MANHOLE	ENDING MANHOLE	SEGMENT	RESIDENTIAL DWELLINGS	STORES / OFFICES	SCHOOLS	RESTAURANTS	CHURCHES	TOTAL FLOW (gpd)	MIN. PIPE DIA. (in)	PROPOSED PIPE DIA. (in)
BAY VIEW AVENUE	45	44	1-30	2	0	0	0	0	15,000	8.17	REMAINING (18")
SECOND AVENUE	55A	44	1-31	6	0	0	0	0	7,800	5.32	8
CENTRAL AVENUE	55B	55A	1-32	18	0	0	0	0	5,400	4.63	8
CENTRAL AVENUE	55C	55A	1-33	2	0	0	0	0	600	2.03	8
BAY VIEW AVENUE	50	45	1-34	1	0	0	0	0	12,600	7.65	REMAINING (18")
FIRST AVENUE	53	45	1-35	5	0	0	0	0	1,800	3.07	8
CENTRAL AVENUE	53A	53	1-36	1	0	0	0	0	300	1.57	8
BAY VIEW AVENUE	48	50	1-37	2	0	0	0	0	9,600	6.91	REMAINING (18")
NORTH AVENUE	51	50	1-38	7	0	0	0	0	2,700	3.57	8
CENTRAL AVENUE	51A	51	1-39	2	0	0	0	0	600	2.03	8
ISLAND AVENUE	49	48	1-40	6	0	0	0	0	9,000	5.61	8
CENTRAL AVENUE	120	49	1-41	4	0	0	0	0	7,200	5.16	8
CENTRAL AVENUE	122	120	1-42	3	0	0	0	0	3,600	3.98	8
BRIGHTON AVENUE	119	120	1-43	4	0	0	0	0	2,400	3.42	8
BAY VIEW AVENUE	117	119	1-44	2	0	0	0	0	600	2.03	8
BAY VIEW AVENUE	118	119	1-45	2	0	0	0	0	600	2.03	8
C STREET	121	122	1-46	7	0	0	0	0	2,100	3.25	8
CENTRAL AVENUE	123	122	1-47	2	0	0	0	0	600	2.03	8
TWELFTH AVENUE	16A	18	1-48	15	0	0	0	0	4,800	4.43	8
CENTRAL AVENUE	16B	16A	1-49	1	0	0	0	0	300	1.57	8
BARNEGAT AVENUE	15	18	1-50	0	0	0	0	0	12,055	6.26	REMAINING (8")
BARNEGAT AVENUE	12	15	1-51	0	0	0	0	0	2,100	3.25	REMAINING (8")
THIRTEENTH AVENUE	13	15	1-52	31	1	0	0	0	9,955	5.83	8
FOURTEENTH AVENUE	10	12	1-53	7	0	0	0	0	2,100	3.25	REMAINING (8")
TWELFTH AVENUE	19	9	1-54	15	0	0	0	0	5,700	4.73	REMAINING (8")
BAY VIEW AVENUE	22B	19	1-55	2	0	0	0	0	600	2.03	REMAINING (8")
BAY VIEW AVENUE	22A	19	1-56	2	0	0	0	0	600	2.03	REMAINING (8")
EASEMENT (DPW YARD)	5	9	1-57	0	0	0	0	0	4,700	4.40	REMAINING (8")
THIRTEENTH AVENUE	3	5	1-58	10	0	0	0	0	4,200	4.22	REMAINING (8")
THIRTEENTH AVENUE	5A	5	1-59	0	1	0	0	0	500	1.90	REMAINING (8")
BAY VIEW AVENUE	2	3	1-60	2	0	0	0	0	1,200	2.64	REMAINING (8")
FOURTEENTH AVENUE	1	2	1-61	2	0	0	0	0	600	2.03	REMAINING (8")
SEVENTH AVENUE	34	35	1-62	17	0	0	0	0	5,100	4.54	REMAINING (8")
CENTRAL AVENUE	92	35	1-63	2	0	0	0	0	7,800	5.32	REMAINING (8")
SIXTH AVENUE	91A	92	1-64	21	0	0	0	0	7,200	5.16	REMAINING (8")
OCEAN AVENUE	34A	91A	1-65	2	0	0	0	0	600	2.03	REMAINING (8")
OCEAN AVENUE	91B	91A	1-66	1	0	0	0	0	300	1.57	REMAINING (8")
CENTRAL AVENUE	89	35	1-67	3	0	0	0	0	54,640	11.91	12
CENTRAL AVENUE	86	89	1-68	11	0	0	0	0	47,140	11.27	12
EIGHTH AVENUE	88	89	1-69	22	0	0	0	0	6,600	5.00	8
CENTRAL AVENUE	82	86	1-70	3	0	0	0	0	36,940	10.28	12
NINTH AVENUE	85	86	1-71	20	0	0	0	0	6,900	5.08	8
OCEAN AVENUE	83	85	1-72	1	0	0	0	0	300	1.57	8
OCEAN AVENUE	84	85	1-73	2	0	0	0	0	600	2.03	8
CENTRAL AVENUE	80	82	1-74	4	0	0	0	0	29,440	9.44	10
TENTH AVENUE	81	82	1-75	22	0	0	0	0	6,600	5.00	8
CENTRAL AVENUE	75	80	1-76	3	1	0	0	0	21,340	8.37	10
ELEVENTH AVENUE	78	80	1-77	20	0	0	0	0	6,900	5.08	8
OCEAN AVENUE	76	78	1-78	2	0	0	0	0	600	2.03	8
OCEAN AVENUE	77	78	1-79	1	0	0	0	0	300	1.57	8
CENTRAL AVENUE	71	75	1-80	2	1	0	0	0	13,560	6.55	8
TWELFTH AVENUE	72	75	1-81	22	0	0	0	0	6,600	5.00	8
CENTRAL AVENUE	66	71	1-82	4	0	0	0	0	5,100	4.54	8
THIRTEENTH AVENUE	69	71	1-83	23	0	0	0	0	7,500	5.24	8
OCEAN AVENUE	67	69	1-84	1	0	0	0	0	300	1.57	8
OCEAN AVENUE	68	69	1-85	1	0	0	0	0	300	1.57	8
FOURTEENTH AVENUE	64	66	1-86	13	0	0	0	0	3,900	4.10	8

BASIN 2

LOCATION	STARTING MANHOLE	ENDING MANHOLE	SEGMENT	RESIDENTIAL DWELLINGS	STORES / OFFICES	SCHOOLS	RESTAURANTS	CHURCHES	TOTAL FLOW (gpd)	MIN. PIPE DIA. (in)	PROPOSED PIPE DIA. (in)
CENTRAL AVENUE	182A	OCUA 12-2	2-1	0	0	0	0	0	118,980	15.95	16
CENTRAL AVENUE	188	182A	2-2	9	0	0	0	0	88,170	14.25	16
L STREET	185	188	2-3	17	0	0	0	0	6,000	4.82	8
BERKELEY LANE	186	187	2-4	3	0	0	0	0	900	2.37	8
CENTRAL AVENUE	192	188	2-5	1	1	0	0	0	79,470	13.71	14
CENTRAL AVENUE	248	192	2-6	3	0	0	0	0	71,100	13.15	14
M STREET	190	192	2-7	23	0	0	0	0	7,800	5.32	8
LAKE AVENUE	189	190	2-8	3	0	0	0	0	900	2.37	8
CENTRAL AVENUE	255	248	2-9	3	0	0	0	0	42,600	10.85	12
N STREET	244	248	2-10	24	0	0	0	0	27,600	8.54	8
LAKE AVENUE	245	244	2-11	3	0	0	0	0	900	2.37	8
N STREET	241	244	2-12	65	0	0	0	0	19,500	7.50	8
CENTRAL AVENUE	270	255	2-13	6	0	0	0	0	25,500	8.95	10
O STREET	252	255	2-14	28	0	0	0	0	16,200	7.00	8
O STREET	249	252	2-15	26	0	0	0	0	7,800	5.32	8
CENTRAL AVENUE	335	270	2-16	5	0	0	0	0	5,700	4.73	8
CENTRAL AVENUE	307	335	2-17	14	0	0	0	0	4,200	4.22	8
LAFAYETTE AVENUE	269	270	2-18	6	0	0	0	0	18,000	7.28	8
BAY VIEW AVENUE	269A	269	2-19	3	0	0	0	0	900	2.37	8
LAFAYETTE AVENUE	257	269	2-20	10	0	0	0	0	3,000	3.72	8
BAY VIEW AVENUE	268	269	2-21	6	0	0	0	0	12,300	6.31	8
BAY VIEW AVENUE	267	268	2-22	4	0	0	0	0	8,400	5.47	8
DECATUR AVENUE	259	268	2-23	7	0	0	0	0	2,100	3.25	8
BAY VIEW AVENUE	266	267	2-24	6	0	0	0	0	4,200	4.22	8
STOCKTON AVENUE	261	267	2-25	10	0	0	0	0	3,000	3.72	8
BAY VIEW AVENUE	265	266	2-26	4	0	0	0	0	1,200	2.64	8
FARRAGUT AVENUE	263	266	2-27	4	0	0	0	0	1,200	2.64	8
CENTRAL AVENUE	182	182A	2-28	0	0	0	0	0	55,410	11.97	12
K STREET	159	182	2-29	35	0	0	0	0	24,600	8.18	REMAINING (8")
BERKELEY LANE	179	159	2-30	2	0	0	0	0	600	2.03	REMAINING (8")
K STREET	175	159	2-31	4	0	0	0	0	13,500	6.53	REMAINING (8")
K COURT	174A	175	2-32	27	0	0	0	0	8,100	5.40	REMAINING (8")
K COURT	174A	175	2-33	14	0	0	0	0	4,200	4.22	REMAINING (8")
CENTRAL AVENUE	170	182	2-34	0	0	0	0	0	30,810	9.61	10
J STREET	171	170	2-35	0	1	0	0	0	990	2.45	REMAINING (8")
CENTRAL AVENUE	169	170	2-36	0	1	0	0	0	29,820	9.49	10
CENTRAL AVENUE	163	169	2-37	11	0	0	0	0	27,900	9.26	10
I STREET	168A	169	2-38	10	1	0	0	0	4,760	4.42	8
CENTRAL AVENUE	163	158	2-39	2	0	0	0	0	18,600	7.95	10
H STREET	161	163	2-40	17	0	0	0	0	6,000	4.82	8
BAY VIEW AVENUE	159	161	2-41	1	0	0	0	0	300	1.57	8
BAY VIEW AVENUE	160	161	2-42	2	0	0	0	0	600	2.03	8
CENTRAL AVENUE	156	158	2-43	2	0	0	0	0	14,100	7.17	10
G STREET	157	158	2-44	13	0	0	0	0	3,900	4.10	8
CENTRAL AVENUE	152	156	2-45	1	0	0	0	0	8,100	5.40	8
F STREET	155C	156	2-46	12	0	0	0	0	5,400	4.63	8
BAY VIEW AVENUE	153	155C	2-47	3	0	0	0	0	900	2.37	REMAINING (8")
BAY VIEW AVENUE	155B	155C	2-48	3	0	0	0	0	900	2.37	REMAINING (8")
CENTRAL AVENUE	150	152	2-49	0	0	0	0	0	4,200	4.22	8
E STREET	151	152	2-50	12	0	0	0	0	3,600	3.98	8
D STREET	149A	150	2-51	10	0	0	0	0	4,200	4.22	8
BAY VIEW AVENUE	147	149A	2-52	2	0	0	0	0	600	2.03	REMAINING (8")
BAY VIEW AVENUE	148A	149A	2-53	2	0	0	0	0	600	2.03	REMAINING (8")

BASIN 3

LOCATION	STARTING MANHOLE	ENDING MANHOLE	SEGMENT	RESIDENTIAL DWELLINGS	STORES / OFFICES	SCHOOLS	RESTAURANTS	CHURCHES	TOTAL FLOW (gpd)	MIN. PIPE DIA. (in)	PROPOSED PIPE DIA. (in)
CENTRAL AVENUE	285A	OCUA 11-4	3-1	0	0	0	0	0	83,700	13.98	14
CENTRAL AVENUE	285	285A	3-2	0	0	0	0	0	42,300	10.82	12
CENTRAL AVENUE	276	285	3-3	2	0	0	0	0	24,600	8.18	8
DECATUR AVENUE	284	285	3-4	12	0	0	0	0	17,700	7.23	8
DECATUR AVENUE	277	284	3-5	27	0	0	0	0	8,100	5.40	8
BOULEVARD	280	284	3-6	15	0	0	0	0	4,500	4.33	8
BOULEVARD	279	284	3-7	5	0	0	0	0	1,500	2.87	8
CENTRAL AVENUE	276A	276	3-8	2	0	0	0	0	600	2.03	8
LAFAYETTE AVENUE	273	276	3-9	33	0	0	0	0	23,400	8.03	8
OCEAN AVENUE	272	273	3-10	25	0	0	0	0	7,500	5.24	8
OCEAN AVENUE	271	273	3-11	20	0	0	0	0	6,000	4.82	8
CENTRAL AVENUE	291	285A	3-12	3	0	0	0	0	41,400	10.73	12
CENTRAL AVENUE	299	291	3-13	7	0	0	0	0	22,200	7.87	8
STOCKTON AVENUE	288	291	3-14	15	0	0	0	0	18,300	7.32	8
OCEAN AVENUE	287	288	3-15	20	0	0	0	0	6,000	4.82	8
OCEAN AVENUE	286	288	3-16	26	0	0	0	0	7,800	5.32	8
CENTRAL AVENUE	304	299	3-17	5	0	0	0	0	6,000	4.82	8
FARRAGUT AVENUE	298	299	3-18	12	0	0	0	0	14,100	6.64	8
FARRAGUT AVENUE	292	298	3-19	27	0	0	0	0	8,100	5.40	8
BOULEVARD	297	298	3-20	4	0	0	0	0	1,200	2.64	8
BOULEVARD	296	298	3-21	4	0	0	0	0	1,200	2.64	8
PORTER AVENUE	302	304	3-22	15	0	0	0	0	4,500	4.33	8

BASIN 4

LOCATION	STARTING MANHOLE	ENDING MANHOLE	SEGMENT	RESIDENTIAL DWELLINGS	STORES / OFFICES	SCHOOLS	RESTAURANTS	CHURCHES	TOTAL FLOW (gpd)	MIN. PIPE DIA. (in)	PROPOSED PIPE DIA. (in)
CENTRAL AVENUE	225A	OCUA 12-1	4-1	0	0	0	0	0	79,100	13.68	14
CENTRAL AVENUE	231	225A	4-2	2	0	0	0	0	32,100	9.76	10
CENTRAL AVENUE	239	231	4-3	4	0	0	0	0	16,500	7.05	8
N STREET	228	231	4-4	23	0	0	0	0	15,000	6.80	8
OCEAN AVENUE	227	228	4-5	25	0	0	0	0	7,500	5.24	8
OCEAN AVENUE	226	228	4-6	2	0	0	0	0	600	2.03	8
O STREET	238	239	4-7	16	0	0	0	0	15,300	6.85	8
O STREET	232	238	4-8	23	0	0	0	0	6,900	5.08	8
BOULEVARD	237	238	4-9	6	0	0	0	0	1,800	3.07	8
BOULEVARD	236	238	4-10	6	0	0	0	0	1,800	3.07	8
CENTRAL AVENUE	225	225A	4-11	0	0	0	0	0	47,000	11.26	12
CENTRAL AVENUE	217	225	4-12	5	0	0	0	0	34,400	10.01	10
M STREET	224	225	4-13	13	0	0	0	0	12,600	6.37	8
M STREET	218	224	4-14	18	0	0	0	0	5,400	4.63	8
BOULEVARD	222	224	4-15	7	0	0	0	0	2,100	3.25	8
BOULEVARD	223	224	4-16	4	0	0	0	0	1,200	2.64	8
CENTRAL AVENUE	211	217	4-17	4	0	0	0	0	19,100	7.44	8
L STREET	214	217	4-18	32	0	0	0	0	13,800	6.59	8
OCEAN AVENUE	213	214	4-19	11	0	0	0	0	3,300	3.85	8
OCEAN AVENUE	212	214	4-20	3	0	0	0	0	900	2.37	8
K STREET	206	211	4-21	7	1	0	0	0	17,900	7.26	8
K STREET	201	206	4-22	16	0	0	0	0	4,800	4.43	8
BOULEVARD	205	206	4-23	3	0	0	0	0	900	2.37	8
BOULEVARD	199	206	4-24	3	0	0	0	0	9,550	5.74	8
J STREET	193	199	4-25	12	1	0	0	0	3,850	4.08	8
J STREET	196	199	4-26	12	0	0	0	0	4,800	4.43	8
OCEAN AVENUE	195	196	4-27	1	0	0	0	0	300	1.57	8
OCEAN AVENUE	194	196	4-28	3	0	0	0	0	900	2.37	8

BASIN 5

LOCATION	STARTING MANHOLE	ENDING MANHOLE	SEGMENT	RESIDENTIAL DWELLINGS	STORES / OFFICES	SCHOOLS	RESTAURANTS	CHURCHES	TOTAL FLOW (gpd)	MIN. PIPE DIA. (in)	PROPOSED PIPE DIA. (in)
CENTRAL AVENUE	146A	OCUA 13-1	5-1	0	0	0	0	0	37,510	10.34	12
CENTRAL AVENUE	167	146A	5-2	1	0	0	0	0	10,510	6.42	10
CENTRAL AVENUE	166	167	5-3	0	1	0	0	0	910	2.38	8
I STREET	164	167	5-4	31	0	0	0	0	9,300	5.68	8
CENTRAL AVENUE	146	146A	5-5	1	0	0	0	0	27,000	9.14	10
H STREET	144	146	5-6	24	0	0	0	0	9,000	5.61	8
OCEAN AVENUE	143	144	5-7	3	0	0	0	0	900	2.37	8
OCEAN AVENUE	142	144	5-8	3	0	0	0	0	900	2.37	8
CENTRAL AVENUE	141A	146	5-9	2	0	0	0	0	17,700	7.80	10
G STREET	139	141A	5-10	26	0	0	0	0	7,800	5.32	8
CENTRAL AVENUE	138	141A	5-11	3	0	0	0	0	9,300	5.68	8
F STREET	136	138	5-12	24	0	0	0	0	8,400	5.47	8
OCEAN AVENUE	135	136	5-13	2	0	0	0	0	600	2.03	8
OCEAN AVENUE	134	136	5-14	2	0	0	0	0	600	2.03	8

BASIN 6

LOCATION	STARTING MANHOLE	ENDING MANHOLE	SEGMENT	RESIDENTIAL DWELLINGS	STORES / OFFICES	SCHOOLS	RESTAURANTS	CHURCHES	TOTAL FLOW (gpd)	MIN. PIPE DIA. (in)	PROPOSED PIPE DIA. (in)
CENTRAL AVENUE	129A	OCUA 13-3	6-1	0	0	0	0	0	54,600	11.91	12
CENTRAL AVENUE	132	129A	6-2	1	0	0	0	0	16,500	7.60	10
CENTRAL AVENUE	133	132	6-3	0	0	0	0	1	3,000	3.72	8
E STREET	130	132	6-4	44	0	0	0	0	13,200	6.48	8
CENTRAL AVENUE	129	129A	6-5	1	0	0	0	0	38,100	10.40	12
D STREET	127	129	6-6	24	0	0	0	0	8,400	5.47	8
OCEAN AVENUE	126	127	6-7	2	0	0	0	0	600	2.03	8
OCEAN AVENUE	125	127	6-8	2	0	0	0	0	600	2.03	8
CENTRAL AVENUE	116	129	6-9	4	0	0	0	0	29,400	9.44	10
C STREET	114	116	6-10	28	0	0	0	0	8,400	5.47	8
CENTRAL AVENUE	113	116	6-11	3	0	0	0	0	19,800	8.14	10
BRIGHTON AVENUE	111	113	6-12	27	0	0	0	0	9,300	5.68	8
OCEAN AVENUE	110	111	6-13	2	0	0	0	0	600	2.03	8
OCEAN AVENUE	109	111	6-14	2	0	0	0	0	600	2.03	8
CENTRAL AVENUE	108	113	6-15	2	0	0	0	0	9,600	5.75	8
ISLAND AVENUE	107	108	6-16	30	0	0	0	0	9,000	5.61	8

BASIN 7

LOCATION	STARTING MANHOLE	ENDING MANHOLE	SEGMENT	RESIDENTIAL DWELLINGS	STORES / OFFICES	SCHOOLS	RESTAURANTS	CHURCHES	TOTAL FLOW (gpd)	MIN. PIPE DIA. (in)	PROPOSED PIPE DIA. (in)
CENTRAL AVENUE	93	OCUA 15-1	7-1	0	0	0	0	0	59,220	12.27	12
CENTRAL AVENUE	94	93	7-2	0	1	0	1	0	20,710	7.67	8
CENTRAL AVENUE	17	94	7-3	13	1	0	0	0	10,960	6.04	8
FOURTH STREET	95	94	7-4	17	0	0	0	0	6,300	4.91	8
OCEAN AVENUE	95A	95	7-5	3	0	0	0	0	900	2.37	8
OCEAN AVENUE	95B	95	7-6	1	0	0	0	0	300	1.57	8
FIFTH STREET	16B	16	7-7	17	1	0	0	0	6,400	4.94	8
CENTRAL AVENUE	97A	93	7-8	0	1	0	0	0	38,510	10.45	12
THIRD AVENUE	96	97A	7-9	21	0	0	0	0	6,300	4.91	REMAINING (8")
CENTRAL AVENUE	99	97A	7-10	11	1	0	0	0	31,650	9.70	10
SECOND AVENUE	98	99	7-11	17	0	0	0	0	5,700	4.73	8
OCEAN AVENUE	98A	98	7-12	2	0	0	0	0	600	2.03	8
CENTRAL AVENUE	102	99	7-13	0	0	0	0	1	22,050	8.47	10
FIRST AVENUE	101	102	7-14	34	0	0	0	0	11,400	6.13	REMAINING (8")
OCEAN AVENUE	101A	101	7-15	2	0	0	0	0	600	2.03	REMAINING (8")
OCEAN AVENUE	101B	101	7-16	2	0	0	0	0	600	2.03	REMAINING (8")
CENTRAL AVENUE	106	102	7-17	0	1	0	0	0	7,650	5.28	8
NORTH AVENUE	104	106	7-18	21	0	0	0	0	6,300	4.91	8
CENTRAL AVENUE	106A	106	7-19	2	0	0	0	0	600	2.03	8

N:\project\2006\0603661\01\feasibility study\[recent sanitary sewer repairs.xls]Sheet1

SCHOOR DEPALMA
Engineers and Consultants

JOB NO. SHEET OF
PROJECT:
SUBJECT:
COMPUTED BY: DATE
CHECKED BY: DATE

GENERAL ASSUMPTIONS

- ALL RESIDENTIAL DWELLINGS (SINGLE FAMILY HOME, APT. UNIT, CONDO UNIT, etc.) ARE 3 BEDROOM UNITS OR LARGER. (USED NJDEP DESIGN CRITERIA 300 gpd/dwelling)
- ONE ELEMENTRY SCHOOL IN BORO ASSUMING TO HAVE CAFETERIA, SHOWERS AND LABORATORIES. (USED NJDEP DESIGN CRITERIA 25 gpd/student)
- FROM 05 CENSUS 2000 DEMOGRAPHIC PROFILE OF BORO TOTAL POPULATION = 2263; UNDER 5 YRS. OLD = 107; 18 YRS. AND OVER = 1938. (2263 - [1938+107] = 218). ASSUMED 218 STUDENTS AT ELEMENTRY SCHOOL.
- ASSUMED ALL CHURCHES HAD A SEATING CAPACITY OF 1000 PERSONS. (USED NJDEP CRITERIA 3 gpd/seat)
- ALL SLOPES (PROPOSED) ARE EQUAL TO NJDEP DESIGN CRITERIA FOR MINIMUM HYDRAULIC SLOPES BASED ON PIPE SIZE AND MATERIAL. (USED S=0.003 FOR 8"ϕ PVC; S=0.002 FOR 10"ϕ PVC)
- SLOPE OF BORO INTERCEPTOR ASSUMED AT S=0.0019 FOR 18"ϕ AND S=0.0013 FOR 20"ϕ. (INFORMATION GATHERED FROM SITE SURVEY AND INSPECTION)
- ASSUMED ALL PROPOSED PIPE (PVC) TO HAVE A FRICTION FACTOR "n" EQUAL TO 0.01 AS PER NJDEP DESIGN CRITERIA. ("n" FACTOR FOR EXISTING BORO INTERCEPTOR USED n=0.013)

SCHOOR DEPALMA
Engineers and Consultants

JOB NO. SHEET OF

PROJECT:

SUBJECT:

COMPUTED BY: DATE

CHECKED BY: DATE

GENERAL ASSUMPTIONS

- ALL STORES AND OFFICES USED NJDEP DESIGN CRITERIA OF 0.1 gpd/sq. ft.
- ALL RESTAURANTS USED NJDEP DESIGN CRITERIA OF 35 gpd/seat

APPENDIX E

ENGINEER'S OPINION OF PROBABLE CONSTRUCTION COSTS

SCHOOR DEPALMA
Engineers and Consultants

OPINION OF PROBABLE COST

PROJECT: Seaside Park Water Distribution System Replacement - Phase I, Route 35 Corridor **DATE:** 9/19/2006 **PROJECT #:** 06 03661 02

TYPE: Construction Cost Estimate - NJDEP Funded Area **MUNICIPALITY:** Borough of Seaside Park

PREPARED: PKC **CHECKED BY:** PKC

ITEM	DESCRIPTION	QUANTITY	UNIT	UNIT PRICE	AMOUNT
1	Mobilization	1	LS	$100,000.00	$100,000.00
2	Traffic Control	1	LS	$15,000.00	$15,000.00
3	Uniform Traffic Directors	384	MH	$80.00	$30,720.00
4	Construction Photo Records	1	LS	$3,500.00	$3,500.00
5	Roadway Excavation - Unclassified	6,400	SY	$10.00	$64,000.00
6	Borrow Excavation	8,533	CY	$10.00	$85,333.33
7	Pipe Bedding Class C, Size No. 57 (Springline to top of pipe)	2,133	CY	$20.00	$42,666.67
8	Dewatering	14,400	LF	$5.00	$72,000.00
9	Test Pits	72	EA	$500.00	$36,000.00
10	Densly Graded Aggregate Base Course 8" Thick (State ROW)	1,422	CY	$25.00	$35,555.56
11	Bituminous Base Course Type I-2 7" Thick (State ROW)	6,400	SY	$15.00	$96,000.00
12	Bituminous Base Course Type I-4 2" Thick (State ROW)	6,400	SY	$5.00	$32,000.00
13	Reconnect 1" Domestic Services	288	EA	$500.00	$144,000.00
14	Reconnect 2" Commercial Services	36	EA	$700.00	$25,200.00
15	12" Dia. Ductile iron Pipe, Class 52	9,000	LF	$52.00	$468,000.00
16	6" Dia. Ductile Iron Pipe, Class 52	5,400	LF	$42.00	$226,800.00
17	12" Gate Valve	43	EA	$1,500.00	$64,500.00
18	6" Gate Valve	65	EA	$1,000.00	$65,000.00
19	6" x 4" Dry Cut Connection to Existing Water Main	65	EA	$1,000.00	$65,000.00
20	12" x 4" Dry Cut Connection to Existing Water Main	7	EA	$1,200.00	$8,400.00
21	8" x 8" Wet Tap	0	EA	$7,500.00	$0.00
22	Fire Hydrant Assembly	36	EA	$3,000.00	$108,000.00
23	12" Looping Water Main	18	EA	$2,000.00	$36,000.00
24	6" Looping Water Main	36	EA	$1,500.00	$54,000.00
25	Temporary Water Services	1	LS	$50,000.00	$50,000.00
26	Flush/Disinfect/Reflush/Biological Testing	1	LS	$10,000.00	$10,000.00
27	Flush and Pressure Test Water Mains	1	LS	$5,000.00	$5,000.00
28	Soil Erosion and Sediment Control	1	LS	$10,000.00	$10,000.00
29	Additional Fittings	1,000	LBS	$5.00	$5,000.00
30	Miscellaneous Concrete	20	CY	$250.00	$5,000.00
31	Replacement and/or Repair of Mis- or Un-Marked San Sewer Services	36	EA	$1,500.00	$54,000.00
32	Water Service Trench Restoration (When Mole Boaring is Not Possible)	36	EA	$1,000.00	$36,000.00
33	Traffic Striping and Markings	1	LS	$1,500.00	$1,500.00
34	Jack and Bore	180	LF	$400.00	$72,000.00

ESTIMATED CONSTRUCTION COST: **$2,126,175.56**

20% PROJECT CONTINGENCY: ***$425,235.11***

TOTAL PROJECT COST: **$2,551,410.67**

REMARKS

\\Sdfile01\N\project\2006\0603661\01\water\cost estimates\[cost estimate 9-21-2006.xls]Phase 1

QualityFirst™
703 Millstream Road, Suite A, Manahawkin, NJ 08050 Tel: 609.597.3123 Fax: 609.597.8978
Manalapan ▪ White Plains ▪ Egg Harbor n Brick ▪ Clinton ▪ Exton ▪ Kulpsville
Parsippany ▪ Philadelphia ▪ Falls ▪ Stafford ▪ Voorhees
www.schoordepalma.com

SCHOOR DEPALMA
Engineers and Consultants

OPINION OF PROBABLE COST

PROJECT: Seaside Park Water Distribution System Replacement - Phase II, Bay Side **DATE:** 9/19/2006 **PROJECT #:** 06 03661 02

TYPE: Construction Cost Estimate - NJDEP Funded Area **MUNICIPALITY:** Borough of Seaside Park

PREPARED: PKC **CHECKED BY:** PKC

ITEM	DESCRIPTION	QUANTITY	UNIT	UNIT PRICE	AMOUNT
1	Mobilization	1	LS	$100,000.00	$100,000.00
2	Traffic Control	1	LS	$15,000.00	$15,000.00
3	Uniform Traffic Directors	1,040	MH	$80.00	$83,200.00
4	Construction Photo Records	1	LS	$3,500.00	$3,500.00
5	Roadway Excavation - Unclassified	17,289	SY	$5.00	$86,444.44
6	Borrow Excavation	23,052	CY	$5.00	$115,259.26
7	Pipe Bedding Class C, Size No. 57 (Springline to top of pipe)	5,763	CY	$20.00	$115,259.26
8	Dewatering	38,900	LF	$5.00	$194,500.00
9	Test Pits	18	EA	$500.00	$9,000.00
10	Densly Graded Aggregate Base Course Type I-5 6" Thick (Township ROW)	2,881	CY	$25.00	$72,037.04
12	Bituminous Surface Course Mix I-5 4" Thick (Township ROW)	17,289	SY	$8.00	$138,311.11
13	Reconnect 1" Copper Domestic Services	860	EA	$500.00	$430,000.00
14	Reconnect 2" Copper Commercial Services	0	EA	$700.00	$0.00
15	12" Dia. Ductile Iron Pipe, Class 52	14,800	LF	$52.00	$769,600.00
16	6" Dia. Ductile Iron Pipe, Class 52	24,100	LF	$42.00	$1,012,200.00
17	12" Gate Valve	40	EA	$1,500.00	$60,000.00
18	6" Gate Valve	60	EA	$1,000.00	$60,000.00
19	6" x 6" Dry Cut Connections at Central Avenue	28	EA	$1,000.00	$28,000.00
20	12" x 12" Dry Cut Connections at Central Avenue	4	EA	$1,200.00	$4,800.00
21	8" x 8" Wet Tap	0	EA	$7,500.00	$0.00
22	Fire Hydrant Assembly	50	EA	$3,000.00	$150,000.00
23	12" Looping Water Main	18	EA	$2,000.00	$36,000.00
24	6" Looping Water Main	24	EA	$1,500.00	$36,000.00
25	Temporary Water Services	1	LS	$50,000.00	$50,000.00
26	Flush/Disinfect/Reflush/Biological Testing	1	LS	$10,000.00	$10,000.00
27	Flush and Pressure Test Water Mains	1	LS	$5,000.00	$5,000.00
28	Soil Erosion and Sediment Control	1	LS	$10,000.00	$10,000.00
29	Additional Fittings	1,000	LBS	$5.00	$5,000.00
30	Miscellaneous Concrete	20	CY	$250.00	$5,000.00
31	Replacement and/or Repair of Mis- or Un-Marked San Sewer Services	45	EA	$1,500.00	$67,500.00
32	Water Service Trench Restoration (When Mole Boaring is Not Possible)	90	EA	$1,000.00	$90,000.00
33	Traffic Striping and Markings	1	LS	$1,500.00	$1,500.00

ESTIMATED CONSTRUCTION COST: **$3,763,111.11**

20% PROJECT CONTINGENCY: **$752,622.22**

TOTAL PROJECT COST: **$4,515,733.33**

REMARKS

\\Sdfile01\N\project\2006\0603661\01\water\cost estimates\[cost estimate 9-21-2006.xls]Phase II

QualityFirst™
703 Millcreek Road, Suite A, Manahawkin, NJ 08050 Tel: 609.597.3123 Fax: 609.597.8978
Manalapan ▪ White Plains ▪ Egg Harbor n Brick ▪ Clinton ▪ Exton ▪ Kulpsville
Parsippany ▪ Philadelphia ▪ Falls ▪ Stafford ▪ Voorhees
www.schoordepalma.com

SCHOOR DEPALMA
Engineers and Consultants

OPINION OF PROBABLE COST

PROJECT: Seaside Park Water Distribution System Replacement - Phase III, Ocean Side **DATE:** 9/19/2006 **PROJECT #:** 06 03661 02

TYPE: Construction Cost Estimate - NJDEP Funded Area **MUNICIPALITY:** Borough of Seaside Park

PREPARED: PKC **CHECKED BY:** PKC

ITEM	DESCRIPTION	QUANTITY	UNIT	UNIT PRICE	AMOUNT
1	Mobilization	1	LS	$100,000.00	$100,000.00
2	Traffic Control	1	LS	$15,000.00	$15,000.00
3	Uniform Traffic Directors	1,104	MH	$80.00	$88,320.00
4	Construction Photo Records	1	LS	$3,500.00	$3,500.00
5	Roadway Excavation - Unclassified	18,400	SY	$10.00	$184,000.00
6	Borrow Excavation	24,533	CY	$10.00	$245,333.33
7	Pipe Bedding Class C, Size No. 57 (Springline to top of pipe)	6,133	CY	$20.00	$122,666.67
8	Dewatering	41,400	LF	$5.00	$207,000.00
9	Test Pits	18	EA	$500.00	$9,000.00
10	Densly Graded Aggregate Base Course Type I-5 6" Thick (County Road)	3,067	CY	$25.00	$76,666.67
11	Bituminous Stabilized Base Course Mix I-2 6" Thick (County Road)	18,400	SY	$13.00	$239,200.00
12	Bituminous Surface Course Mix I-5 1.5" Thick (County Road)	18,400	SY	$5.00	$92,000.00
13	Densly Graded Aggregate Base Course Type I-5 6" Thick (Township Road)	3,067	SY	$15.00	$46,000.00
14	Bituminous Surface Course Mix I-5 4" Thick (Township Road)	18,400	SY	$5.00	$92,000.00
15	Reconnect 1" Copper Domestic Services	1,080	EA	$500.00	$540,000.00
16	Reconnect 2" Copper Commercial Services	0	EA	$700.00	$0.00
17	12" Dia. Ductile Iron Pipe, Class 52	10,900	LF	$52.00	$566,800.00
18	6" Dia. Ductile Iron Pipe, Class 52	30,500	LF	$42.00	$1,281,000.00
19	12" Gate Valve	39	EA	$1,500.00	$58,500.00
20	6" Gate Valve	60	EA	$1,000.00	$60,000.00
21	6" x 6" Dry Cut Connections at Central Avenue	33	EA	$1,000.00	$33,000.00
22	12" x 12" Dry Cut Connections at Central Avenue	3	EA	$1,200.00	$3,600.00
23	8" x 8" Wet Tap	0	EA	$7,500.00	$0.00
24	Fire Hydrant Assembly	50	EA	$3,000.00	$150,000.00
25	12" Looping Water Main	18	EA	$2,000.00	$36,000.00
26	6" Looping Water Main	30	EA	$1,500.00	$45,000.00
27	Temporary Water Services	1	LS	$50,000.00	$50,000.00
28	Flush/Disinfect/Reflush/Biological Testing	1	LS	$10,000.00	$10,000.00
29	Flush and Pressure Test Water Mains	1	LS	$5,000.00	$5,000.00
30	Soil Erosion and Sediment Control	1	LS	$10,000.00	$10,000.00
31	Additional Fittings	1,000	LBS	$5.00	$5,000.00
32	Miscellaneous Concrete	20	CY	$250.00	$5,000.00
33	Replacement and/or Repair of Mis- or Un-Marked San Sewer Services	44	EA	$1,500.00	$66,000.00
34	Water Service Trench Restoration (When Mole Boaring is Not Possible)	90	EA	$1,000.00	$90,000.00
35	Traffic Striping and Markings	1	LS	$1,500.00	$1,500.00

ESTIMATED CONSTRUCTION COST: **$4,537,086.67**

20% PROJECT CONTINGENCY: **$907,417.33**

TOTAL PROJECT COST: **$5,444,504.00**

REMARKS

\\Sdfls01\N\project\2006\0603661\01\water\cost estimates\[cost estimate 9-21-2006.xls]Phase III

BOROUGH OF SEASIDE PARK
WATER DISTRIBUTION AND SANITARY SEWER IMPROVEMENTS
FEASIBILITY STUDY / CONCEPTUAL DESIGN
ENGINEER'S OPINION OF PROBABLE CONSTRUCTION COSTS
Revised September 19, 2006

PHASE I - SANITARY SEWER

ITEM	QUANTITY	UNIT	UNIT PRICE	EXTENSION
Mobilization	1	L.S.	$ 120,000.00	$ 120,000.00
Excavation, 0 - 8 feet	14,000	c.y.	$ 5.00	$ 70,000.00
Excavation, 8 - 12 feet	1,400	c.y.	$ 10.00	$ 14,000.00
Excavation, Asphalt	2,417	s.y.	$ 5.00	$ 12,085.00
Dewatering	15,665	l.f.	$ 5.00	$ 78,325.00
Bankrun Sand and Gravel Backfill	12,107	c.y.	$ 15.00	$ 181,605.00
3/4" Broken Stone Backfill	2,414	c.y.	$ 20.00	$ 48,280.00
Densely Graded Aggregate	1,811	c.y.	$ 25.00	$ 45,275.00
Stabilized Base Mix I-2 (7")	2,417	s.y.	$ 25.00	$ 60,425.00
Surface Course Mix I-4 (2")	2,417	s.y.	$ 12.00	$ 29,004.00
Remove Concrete Sidewalk	7,476	s.y.	$ 10.00	$ 74,760.00
Install Concrete Sidewalk	7,476	s.y.	$ 50.00	$ 373,800.00
Remove Concrete Apron	620	s.y.	$ 15.00	$ 9,300.00
Install Concrete Apron	620	s.y.	$ 60.00	$ 37,200.00
8" dia. SDR-35 PVC pipe	7,700	l.f.	$ 40.00	$ 308,000.00
10" dia. SDR-35 PVC pipe	6,280	l.f.	$ 50.00	$ 314,000.00
12" dia. SDR-35 PVC pipe	1,025	l.f.	$ 60.00	$ 61,500.00
14" dia. SDR-35 PVC pipe	650	l.f.	$ 75.00	$ 48,750.00
16" dia. SDR-35 PVC pipe	10	l.f.	$ 100.00	$ 1,000.00
Reconnect PVC 4" sanitary service	55	ea.	$ 1,500.00	$ 82,500.00
Reconnect PVC 6" sanitary service	25	ea.	$ 1,600.00	$ 40,000.00
Manhole - 4' diameter	36	ea.	$ 2,500.00	$ 90,000.00
Manhole - 5' diameter	38	ea.	$ 3,000.00	$ 114,000.00
Manhole - Doghouse 4' diameter	45	ea.	$ 4,000.00	$ 180,000.00
Manhole - Doghouse 5' diameter	8	ea.	$ 5,000.00	$ 40,000.00
NJ Highway 35 Crossing	3	ea.	$ 60,000.00	$ 180,000.00
OCUA Manhole Connections	5	ea.	$ 2,500.00	$ 12,500.00
Remove Concrete Curb	12,000	l.f.	$ 5.00	$ 60,000.00
Install Concrete Curb	12,000	l.f.	$ 15.00	$ 180,000.00
Grout and Abandon Existing Sewers	1	L.S.	$ 150,000.00	$ 150,000.00
Protect Utility Poles	1	L.S.	$ 25,000.00	$ 25,000.00
Utility Protection/Relocation	1	L.S.	$ 50,000.00	$ 50,000.00
Coordinate with Local Utilities	1	L.S.	$ 5,000.00	$ 5,000.00
Environmental Protection	1	L.S.	$ 20,000.00	$ 20,000.00
Top Soil, Seeding, Mulching	1	L.S.	$ 5,000.00	$ 5,000.00
Soil Erosion Control	1	L.S.	$ 25,000.00	$ 25,000.00
Uniformed Police Officers	1	L.S.	$ 35,000.00	$ 35,000.00
Traffic Protection	1	L.S.	$ 50,000.00	$ 50,000.00
Traffic Signage/DEP Signage	1	L.S.	$ 5,000.00	$ 5,000.00

PHASE I SUB-TOTAL		$ 3,236,309.00
	20% CONTINGENCY	$ 647,261.80
	PHASE I TOTAL	$ 3,883,570.80
	SAY	$ 3,880,000.00

BOROUGH OF SEASIDE PARK
WATER DISTRIBUTION AND SANITARY SEWER IMPROVEMENTS
FEASIBILITY STUDY / CONCEPTUAL DESIGN
ENGINEER'S OPINION OF PROBABLE CONSTRUCTION COSTS
Revised September 19, 2006

PHASE II - SANITARY SEWER

ITEM	QUANTITY	UNIT	UNIT PRICE	EXTENSION
Mobilization	1	L.S.	$ 90,000.00	$ 90,000.00
Excavation, 0 - 8 feet	18,000	c.y.	$ 5.00	$ 90,000.00
Excavation, Asphalt	10,510	s.y.	$ 5.00	$ 52,550.00
Dewatering	16,765	l.f.	$ 5.00	$ 83,825.00
Bankrun Sand and Gravel Backfill	12,407	c.y.	$ 15.00	$ 186,105.00
3/4" Broken Stone Backfill	3,160	c.y.	$ 20.00	$ 63,200.00
Densely Graded Aggregate	1,580	c.y.	$ 25.00	$ 39,500.00
Surface Course Mix I-2 (4") - Trench Restoration	10,510	s.y.	$ 25.00	$ 262,750.00
Remove Concrete Sidewalk	667	s.y.	$ 10.00	$ 6,670.00
Install Concrete Sidewalk	667	s.y.	$ 50.00	$ 33,350.00
Remove Concrete Apron	50	s.y.	$ 15.00	$ 750.00
Install Concrete Apron	50	s.y.	$ 60.00	$ 3,000.00
8" dia. SDR-35 PVC pipe	16,765	l.f.	$ 40.00	$ 670,600.00
Reconnect PVC 4" sanitary service	425	ea.	$ 2,000.00	$ 850,000.00
Reconnect PVC 6" sanitary service	50	ea.	$ 2,100.00	$ 105,000.00
Manhole - 4' diameter	71	ea.	$ 2,500.00	$ 177,500.00
Manhole - Doghouse 4' diameter	3	ea.	$ 4,000.00	$ 12,000.00
By-Pass Pumping of Sewage	1	L.S.	$ 25,000.00	$ 25,000.00
Remove Concrete Curb	1,000	l.f.	$ 5.00	$ 5,000.00
Install Concrete Curb	1,000	l.f.	$ 15.00	$ 15,000.00
Grout and Abandon Existing Sewers	1	L.S.	$ 50,000.00	$ 50,000.00
Protect Utility Poles	1	L.S.	$ 25,000.00	$ 25,000.00
Utility Protection/Relocation	1	L.S.	$ 50,000.00	$ 50,000.00
Coordinate with Local Utilities	1	L.S.	$ 5,000.00	$ 5,000.00
Environmental Protection	1	L.S.	$ 20,000.00	$ 20,000.00
Top Soil, Seeding, Mulching	1	L.S.	$ 5,000.00	$ 5,000.00
Soil Erosion Control	1	L.S.	$ 25,000.00	$ 25,000.00
Uniformed Police Officers	1	L.S.	$ 25,000.00	$ 25,000.00
Traffic Protection	1	L.S.	$ 50,000.00	$ 50,000.00
Traffic Signage/DEP Signage	1	L.S.	$ 5,000.00	$ 5,000.00

PHASE II SUB-TOTAL		$ 3,031,800.00
	20% CONTINGENCY	$ 606,360.00
	PHASE II TOTAL	$ 3,638,160.00
	SAY	$ 3,640,000.00

BOROUGH OF SEASIDE PARK
WATER DISTRIBUTION AND SANITARY SEWER IMPROVEMENTS
FEASIBILITY STUDY / CONCEPTUAL DESIGN
ENGINEER'S OPINION OF PROBABLE CONSTRUCTION COSTS
Revised September 19, 2006

PHASE III - SANITARY SEWER

ITEM	QUANTITY	UNIT	UNIT PRICE	EXTENSION
Mobilization	1	L.S.	$ 120,000.00	$ 120,000.00
Excavation, 0 - 8 feet	29,449	c.y.	$ 5.00	$ 147,245.00
Excavation, Asphalt	20,300	s.y.	$ 5.00	$ 101,500.00
Dewatering	30,450	l.f.	$ 5.00	$ 152,250.00
Bankrun Sand and Gravel Backfill	17,713	c.y.	$ 15.00	$ 265,695.00
3/4" Broken Stone Backfill	5,746	c.y.	$ 20.00	$ 114,920.00
Densely Graded Aggregate	3,383	c.y.	$ 25.00	$ 84,575.00
Surface Course Mix I-2 (4") - Boro Road	17,133	s.y.	$ 25.00	$ 428,325.00
Surface Course Mix I-5 (2") - County Road	3,167	s.y.	$ 12.00	$ 38,004.00
Stabilized Base Mix I-2 (6") - County Road	3,167	s.y.	$ 25.00	$ 79,175.00
8" dia. SDR-35 PVC pipe	30,450	l.f.	$ 40.00	$ 1,218,000.00
Reconnect PVC 4" sanitary service	770	ea.	$ 2,000.00	$ 1,540,000.00
Reconnect PVC 6" sanitary service	50	ea.	$ 2,100.00	$ 105,000.00
Manhole - 4' diameter	138	ea.	$ 2,500.00	$ 345,000.00
Manhole - Doghouse 4' diameter	7	ea.	$ 4,000.00	$ 28,000.00
By-Pass Pumping of Sewage	1	L.S.	$ 25,000.00	$ 25,000.00
Grout and Abandon Existing Sewers	1	L.S.	$ 50,000.00	$ 50,000.00
Protect Utility Poles	1	L.S.	$ 25,000.00	$ 25,000.00
Utility Protection/Relocation	1	L.S.	$ 50,000.00	$ 50,000.00
Coordinate with Local Utilities	1	L.S.	$ 5,000.00	$ 5,000.00
Environmental Protection	1	L.S.	$ 20,000.00	$ 20,000.00
Top Soil, Seeding, Mulching	1	L.S.	$ 5,000.00	$ 5,000.00
Soil Erosion Control	1	L.S.	$ 25,000.00	$ 25,000.00
Uniformed Police Officers	1	L.S.	$ 25,000.00	$ 25,000.00
Traffic Protection	1	L.S.	$ 50,000.00	$ 50,000.00
Traffic Signage/DEP Signage	1	L.S.	$ 5,000.00	$ 5,000.00

PHASE III SUB-TOTAL		$ 5,052,689.00
	20% CONTINGENCY	$ 1,010,537.80
	PHASE III TOTAL	$ 6,063,226.80
	SAY	$ 6,060,000.00

PROJECT TOTAL		$ 13,580,000.00
	SAY	$ 13,580,000.00

N:\project\2006\0603661\01\wastewater\cost estimates\[cost opinion - 2006 09-19.xls]Sheet1

SCHOOR DEPALMA
Engineers and Consultants

JOB NO. 060366102 SHEET 1 OF
PROJECT:
SUBJECT:
COMPUTED BY: MLN DATE 9/1/06
CHECKED BY: 'REVISED' DATE 9/19/06

SEASIDE PARK SANITARY SEWER
FEASIBILITY STUDY / CONCEPTUAL DESIGN
COST OPINION - PHASE I

EXCAVATION CALCULATIONS

MH 66 TO MH 80 (14th TO 11th AVE.)

TRENCH

825 ft x *4 ft x 5 ft = 16,500 ft³ ≈ 610 yd³

MH PITS

**20 ft² x 5 ft = 100 ft³ ≈ 3.7 yd³ x (4 MHs) ≈ 15 yd³

MH 80 TO MH 89 (11th TO 8th AVE)

TRENCH

825 ft x 4 ft x 6 ft = 19,800 ft³ ≈ 735 yd³

MH PITS

20 ft² x 6 ft = 120 ft³ ≈ 4 yd³ x (3 MHs) ≈ 12 yd³

* ASSUMED 4 ft TRENCH
** ASSUMED SIZE OF PIT FOR MANHOLE MINUS TRENCH (SEE SHEET 8 FOR CALCULATION)

SCHOOR DEPALMA
Engineers and Consultants

JOB NO. SHEET 2 OF
PROJECT:
SUBJECT:
COMPUTED BY: DATE
CHECKED BY: DATE

MH 89 TO MH 38 (8th TO 7th TO BAY VIEW AVE)

TRENCH

930 ft x 4 ft x 8 ft = 29,760 ft^3 ≈ 1100 yd^3

MH PITS

20 ft^2 x 8 ft = 160 ft^3 ≈ 6 yd^3 x (6 MHs) = 36 yd^3

MH 63 TO MH 37 (6th TO 7th)

TRENCH

150 ft x 4 ft x 5 ft = 3000 ft^3 ≈ 110 yd^3

MH PIT

20 ft^2 x 5 ft = 100 ft^3 ≈ 4 yd^3 x (1 MH) = 4 yd^3

MH 62A TO MH 39 (6th TO BAY VIEW AVE)

TRENCH

300 ft x 4 ft x 7 ft = 8400 ft^3 ≈ 310 yd^3

MH PIT

20 ft^2 x 7 ft = 140 ft^3 ≈ 5 yd^3 x (2 MHs) = 10 yd^3

SCHOOR DEPALMA
Engineers and Consultants

JOB NO.
SHEET 3 OF
PROJECT:
SUBJECT:
COMPUTED BY: DATE
CHECKED BY: DATE

MH 61 TO MH 40 (5th TO BAY VIEW AVE)

TRENCH

400 ft x 4 ft x 7 ft = 11,200 ft³ ≈ 415 yd³

MH PITS

20 ft² x 7 ft = 140 ft³ ≈ 5 yd³ x (2 MHs) = 10 yd³

MH 58 TO MH 42 (4th TO BAY VIEW AVE)

TRENCH

825 ft x 4 ft x 6 ft = 19,800 ft³ ≈ 735 yd³

MH PITS

20 ft² x 6 ft = 120 ft³ ≈ 4 yd³ x (4 MHs) = 16 yd³

MH 55 TO MH 44 (2nd TO BAY VIEW AVE)

TRENCH

725 ft x 4 ft x 5 ft = 14,500 ft³ ≈ 540 yd³

MH PITS

20 ft² x 5 ft ≈ 100 ft³ ≈ 4 yd³ x (4 MHs) = 16 yd³

SCHOOR DEPALMA
Engineers and Consultants

JOB NO.
PROJECT:
SHEET 4 OF
SUBJECT:
COMPUTED BY:
CHECKED BY: DATE
DATE

MH 53 TO M45 (1st TO BAY VIEW AVE)

TRENCH

$425\,ft \times 4\,ft \times 5\,ft = 8500\,ft^3 \approx 315\,yd^3$

MH PITS

$20\,ft^2 \times 5\,ft = 100\,ft^3 \approx 4\,yd^3 \times (3\,MHs) = 12\,yd^3$

MH 16 TO MH 105 (5th TO NORTH AVE)

TRENCH

$1600\,ft \times 4\,ft \times 6\,ft = 38{,}400\,ft^3 \approx 1420\,yd^3$

MH PITS

$20\,ft^2 \times 6\,ft = 120\,ft^3 \approx 4\,yd^3 \times (9\,MHs) = 36\,yd^3$

MH 123 TO MH 48 (C TO BAY VIEW AVE)

TRENCH

$975\,ft \times 4\,ft \times 5\,ft = 19{,}500\,ft^3 \approx 720\,yd^3$

MH PITS

$20\,ft^2 \times 5\,ft = 100\,ft^3 \approx 4\,yd^3 \times (6\,MHs) = 24\,yd^3$

SCHOOR DEPALMA
Engineers and Consultants

JOB NO.
SHEET 5 OF
PROJECT:
SUBJECT:
COMPUTED BY: DATE
CHECKED BY: DATE

MH 108 TO MH 133 (ISLAND TO E ST.)

TRENCH

$1275\ ft \times 4\ ft \times 6\ ft = 30{,}600\ ft^3 \approx 1130\ yd^3$

MH PITS

$20\ ft^2 \times 6\ ft = 120\ ft^3 \approx 4\ yd^3 \times (7\ MHs) = 28\ yd^3$

MH 138 TO MH 166 (F TO I ST.)

TRENCH

$1025\ ft \times 4\ ft \times 5\ ft = 20{,}500\ ft^3 \approx 760\ yd^3$

MH PITS

$20\ ft^2 \times 5\ ft = 100\ ft^3 \approx 4\ yd^3 \times (6\ MHs) = 24\ yd^3$

MH 150 TO MH 182 (D TO K ST.)

TRENCH

$1900\ ft \times 4\ ft \times 8\ ft = 60{,}800\ ft^3 \approx 2250\ yd^3$

MH PITS

$20\ ft^2 \times 8\ ft = 160\ ft^3 \approx 6\ yd^3 \times (9\ MHs) = 54\ yd^3$

SCHOOR DEPALMA
Engineers and Consultants

JOB NO. SHEET 6 OF
PROJECT:
SUBJECT:
COMPUTED BY: DATE
CHECKED BY: DATE

MH 305 TO MH 270 (DECATUR TO LAFAYETTE AVE)

TRENCH

$350\ ft \times 4\ ft \times 5\ ft = 7000\ ft^3 \approx 260\ yd^3$

MH PITS

$20\ ft^2 \times 5\ ft = 100\ ft^3 \approx 4\ yd^3 \times (2\ MHs) = 8\ yd^3$

MH 270 TO MH 248 (LAFAYETTE TO N ST.)

TRENCH

$500\ ft \times 4\ ft \times 7\ ft = 14{,}000\ ft^3 \approx 520\ yd^3$

MH PITS

$20\ ft^2 \times 7\ ft = 140\ ft^3 \approx 5\ yd^3 \times (2\ MHs) = 10\ yd^3$

MH 248 TO MH 182 (N TO K ST)

TRENCH

$700\ ft \times 4\ ft \times 10\ ft = 28000\ ft^3 \approx 1035\ yd^3$

MH PITS

$20\ ft^2 \times 10\ ft = 200\ ft^3 \approx 7.5\ yd^3 \times (4\ MHs) = 30\ yd^3$

SCHOOR DEPALMA
Engineers and Consultants

JOB NO.
SHEET 7 OF
PROJECT:
SUBJECT:
COMPUTED BY: DATE
CHECKED BY: DATE

MH 304 TO MH 276 (PORTER TO LAFAYETTE)

TRENCH

$1200\,ft \times 4\,ft \times 6\,ft = 28\,800\,ft^3 \approx 1065\,yd^3$

MH PITS

$20\,ft^2 \times 6\,ft = 120\,ft^3 = 4\,yd^3 \times (7\,MHs) = 28\,yd^3$

MH 239 TO MH 211 (O TO J ST.)

TRENCH

$1100 \times 4\,ft \times 6\,ft = 26400\,ft^3 \approx 980\,yd^3$

MH PITS

$20\,ft^2 \times 6\,ft = 120\,ft^3 \approx 4\,yd^3 \times (6\,MHs) = 24\,yd^3$

PHASE 1 TOTAL = $15,400\,yd^3$ SAY $15,500\,yd^3$

SCHOOR DEPALMA
Engineers and Consultants

JOB NO.
SHEET 8 OF
PROJECT:
SUBJECT: MANHOLE PIT CALCS
COMPUTED BY: DATE
CHECKED BY: DATE

MH PIT

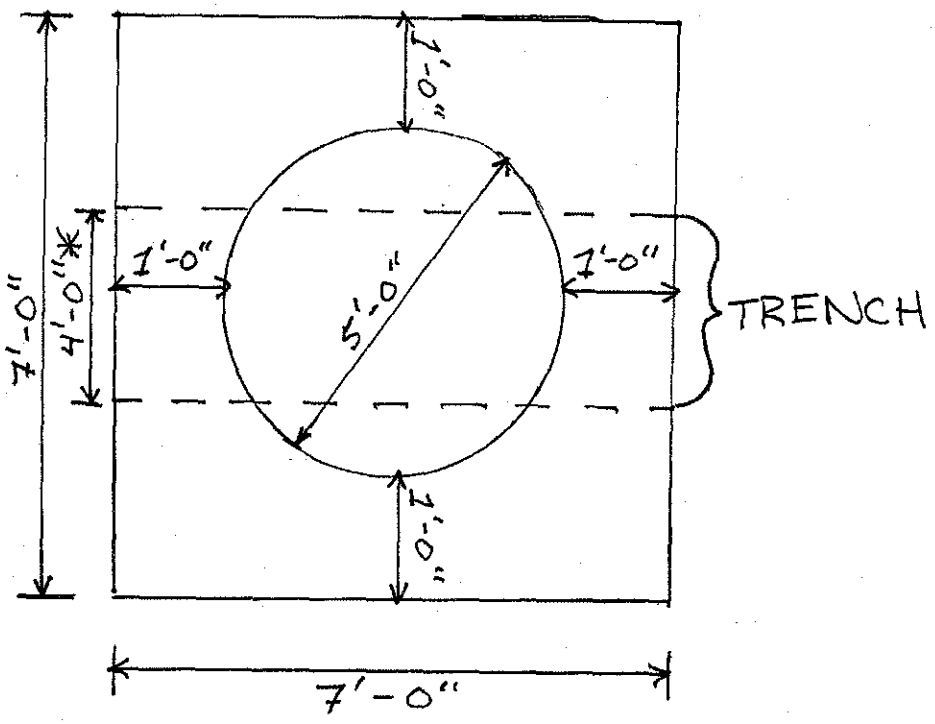

7 ft x 7 ft = 49 ft²

TRENCH
7ft x 4 ft = 28 ft²

TRENCH ALREADY ACCOUNTED IN PIPE EXCAVATION

PIT - TRENCH = 49 - 28 = 21 ft² SAY 20 ft²

* ASSUME THE SAME AREA FOR MANHOLE PIT WITH A 5 ft. TRENCH ACROSS.

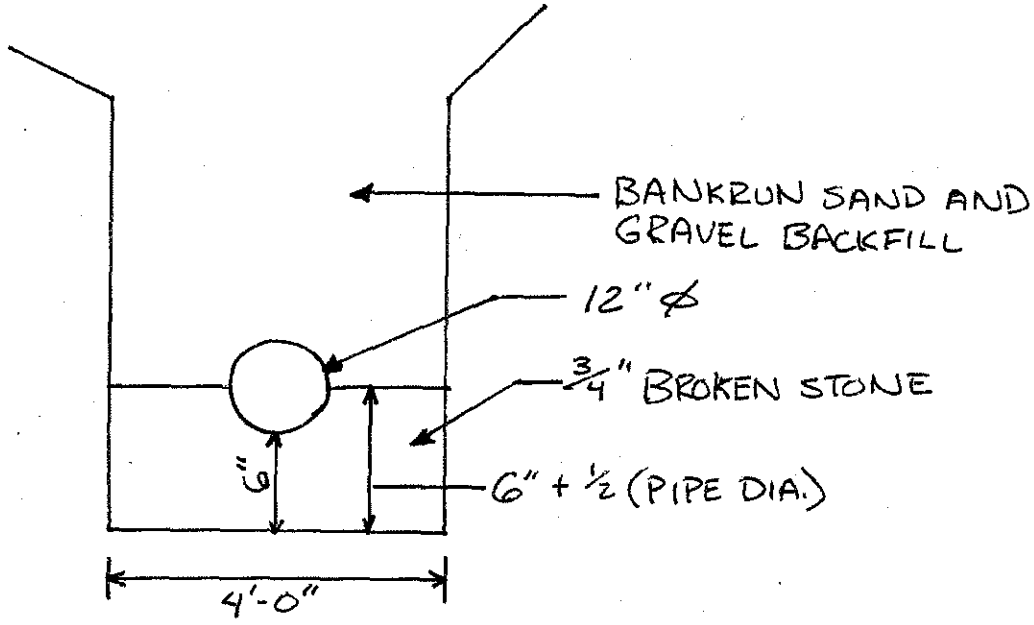

3/4" BROKEN STONE

$6'' + \frac{1}{2}(12'') = 12''$

- 15665 LF PROPOSED PIPE FOR PHASE I

$1ft \times 15665\ ft \times 4ft = 62660\ ft^3 \approx 2320\ yd^3$

- 127 TOTAL MANHOLES PROPOSED FOR PHASE I (SD STANDARD 12" MIN - 3/4" STONE BASE)

$1ft \times {}^{*}20ft^2 = 20ft^3 \times (127\ MHs) = 2540\ ft^3 \approx 94\ yd^3$

$2320 + 94 = 2414\ yd^3$

* MANHOLE PIT CALCULATIONS SEE SHEET 8

SCHOOR DEPALMA
Engineers and Consultants

JOB NO.
SHEET 10 OF
PROJECT:
SUBJECT:
COMPUTED BY: DATE
CHECKED BY: DATE

PIPE FOOTAGES

PHASE I

8" Ø PVC	=	7,700	LF
10" Ø PVC	=	6,280	LF
12" Ø PVC	=	1,025	LF
14" Ø PVC	=	650	LF
16" Ø PVC	=	10	LF
		15,665	LF

PHASE II

8" Ø PVC	=	16,765	LF
		16,765	LF

PHASE III

8" Ø PVC	=	30,450	LF
		30,450	LF

PROJECT TOTAL

8" Ø PVC	=	54,915	LF
10" Ø PVC	=	6,280	LF
12" Ø PVC	=	1,025	LF
14" Ø PVC	=	650	LF
16" Ø PVC	=	10	LF
		62,880	LF

SCHOOR DEPALMA
Engineers and Consultants

JOB NO.
SHEET 11 OF
PROJECT:
SUBJECT:
COMPUTED BY: DATE
CHECKED BY: DATE

MANHOLES

PHASE I = 127
PHASE II = 74
PHASE III = 145

TOTAL 346

SCHOOR DEPALMA
Engineers and Consultants

JOB NO.
SHEET 12 OF
PROJECT:
SUBJECT:
COMPUTED BY: DATE
CHECKED BY: DATE

SIDEWALK

- ASSUMED 4 ft WIDE SIDEWALKS
- 11525 LF OF PIPE PROPOSED IN SIDEWALK IN PHASE 1

$11525\,ft \times 4\,ft = 46100\,ft^2 \approx 5125\,yd^2$

- ASSUMED 5 ft x 4 ft CONCRETE APRONS (SIDEWALK)
- 93 SIDEWALK CORNERS IN PHASE 1

$5\,ft \times 4\,ft = 20\,ft^2/corner \times 93\,corners = 1860\,ft^2 \approx 205\,yd^2$

- ASSUMED 10 ft x 4 ft CONCRETE APRONS (DRIVEWAYS)
- 70 EXISTING DRIVEWAYS IN PHASE 1

$10\,ft \times 4\,ft = 40\,ft^2/driveway \times 70\,driveways = 2800\,ft^2 \approx 310\,yd^3$

SCHOOR DEPALMA
Engineers and Consultants

JOB NO. SHEET 13 OF
PROJECT:
SUBJECT:
COMPUTED BY: DATE
CHECKED BY: DATE

DGA AND BITUMINOUS MIXES

- ONLY NJ DOT ROADS AND BOROUGH ROADS EFFECTED IN PHASE I
- 2425 LF OF BOROUGH ROADS EFFECTED IN PHASE I
- 1925 LF OF NJ DOT ROADS EFFECTED IN PHASE I
- ASSUMING 4 ft TRENCH (PLUS 6" MIN. ON EACH SIDE OF TRENCH)
- NJ DOT ROAD STANDARD: 2" SURFACE COURSE (MIX I-4)
  7" BASE COURSE (MIX I-2)
  8" DGA
- BOROUGH ROAD STANDARD: 4" SURFACE COURSE (MIX I-2)
  6" DGA

$2425 ft \times 5 ft = 12125 ft^2 \approx 1347 yd^2$

$1925 ft \times 5 ft = 9625 ft^2 \approx 1070 yd^2$

$1347 + 1070 = 2417 yd^2$

- DGA CALCULATION FOR PAVEMENT

$[12125 ft^2 \times (6/12) ft] + [9625 ft^2 \times (8/12) ft] = 12479 ft^3 \approx 462 yd^3$

- NEW SIDEWALK/APRONS IN PHASE I EQUALS $5750 yd^2 \approx 51750 ft^2$

$51750 ft^2 \times (6/12) ft = 25875 ft^3 \approx 960 yd^3$

$462 + 960 = 1422 yd^3$

SEASIDE PARK SANITARY SEWER
FEASIBILITY STUDY / CONCEPTUAL DESIGN
COST OPINION - PHASE II

EXCAVATION CALCULATIONS

MH 13 TO MH 15 (13th AVE)

TRENCH

550 ft x 5 ft x *5 ft = 13750 ft^3 ≈ 510 yd^3

MH PITS

**20 ft^2 x 5 ft = 100 ft^3 x (2 MHs) = 200 ft^3 ≈ 7 yd^3

MH 16A TO MH 18 (12th AVE)

TRENCH

625 ft x 5 ft x 5 ft = 15625 ft^3 ≈ 580 yd^3

MH PITS

20 ft^2 x 5 ft = 100 ft^3 x (3 MHs) = 300 ft^3 ≈ 11 yd^3

* ASSUMED 5 ft TRENCH
** ASSUMED SIZE OF PIT FOR MANHOLES MINUS TRENCH (SEE SHEET 8 FOR CALCULATIONS)

SCHOOR DEPALMA
Engineers and Consultants

JOB NO.
SHEET 16 OF
PROJECT:
SUBJECT:
COMPUTED BY: DATE
CHECKED BY: DATE

MH 20A TO MH 24 (11th AVE)

TRENCH

550 ft × 5 ft. × 5 ft = 13750 ft^3 ≈ 510 yd^3

MH PITS

20 ft^2 × 5 ft = 100 ft^3 × (2 MHs) = 200 ft^3 ≈ 7 yd^3

MH 25 TO MH 27 (10th AVE)

TRENCH

600 ft × 6 ft × 5 ft = 18000 ft^3 ≈ 665 yd^3

MH PITS

20 ft^2 × 6 ft = 120 ft^3 × (2 MHs) = 240 ft^3 ≈ 9 yd^3

MH 28 TO MH 30 (9th AVE)

TRENCH

600 ft × 5 ft × 5 ft = 15000 ft^3 ≈ 555 yd^3

MH PITS

20 ft^2 × 5 ft = 100 ft^3 × (2 MHs) = 200 ft^3 ≈ 7 yd^3

SCHOOR DEPALMA
Engineers and Consultants

JOB NO.
SHEET 17 OF
PROJECT:
SUBJECT:
COMPUTED BY: DATE
CHECKED BY: DATE

MH 31 TO MH 32 (8th AVE)

TRENCH

550 ft x 6 ft x 5 ft = 16500 ft³ ≈ 610 yd³

MH PITS

20 ft² x 6 ft = 120 ft³ x (2 MHs) = 240 ft³ ≈ 9 yd³

MH 30A TO MH 30 (9th AVE)

TRENCH

175 ft x 5 ft x 5 ft = 4375 ft³ ≈ 160 yd³

MH PITS

20 ft² x 5 ft = 100 ft³ x (1 MH) = 100 ft³ ≈ 4 yd³

MH 26 TO MH 27 (10th AVE)

TRENCH

300 ft x 6 ft x 5 ft = 9000 ft³ ≈ 330 yd³

MH PITS

20 ft² x 6 ft = 120 ft³ x (1 MH) = 120 ft³ ≈ 4 yd³

SCHOOR DEPALMA
Engineers and Consultants

JOB NO.
SHEET 18 OF
PROJECT:
SUBJECT:
COMPUTED BY: DATE
CHECKED BY: DATE

MH 23 TO MH 24 (11th AVE)

TRENCH

$450\ ft \times 7\ ft \times 5\ ft = 15750\ ft^3 \approx 580\ yd^3$

MH PITS

$20\ ft^2 \times 7\ ft = 140\ ft^3 \times (2\ MHs) = 280\ ft^3 \approx 10\ yd^3$

MH 119 TO MH 120 (BRIGHTON AVE)

TRENCH

$275\ ft \times 5\ ft \times 5\ ft = 6875\ ft^3 \approx 255\ yd^3$

MH PITS

$20\ ft^2 \times 5\ ft = 100\ ft^3 \times (2\ MHs) = 200\ ft^3 \approx 7\ yd^3$

MH 121 TO MH 122 (C ST.)

TRENCH

$225\ ft \times 4\ ft \times 5\ ft = 4500\ ft^3 \approx 165\ yd^3$

MH PITS

$20\ ft^2 \times 4\ ft = 80\ ft^3 \times (1\ MH) = 80\ ft^3 \approx 3\ yd^3$

SCHOOR DEPALMA
Engineers and Consultants

JOB NO.
SHEET 19 OF
PROJECT:
SUBJECT:
COMPUTED BY: DATE
CHECKED BY: DATE

MH 149A TO MH 150 (D ST.)

TRENCH

250 ft x 5 ft x 5 ft = 6250 ft^3 ≈ 230 yd^3

MH PITS

20 ft^2 x 5 ft = 100 ft^3 x (2 MHs) = 200 ft^3 ≈ 7 yd^3

MH 151 TO MH 152 (E ST.)

TRENCH

325 ft x 5 ft x 5 ft = 8125 ft^3 ≈ 300 yd^3

MH PITS

20 ft^2 x 5 ft = 100 ft^3 x (1 MH) = 100 ft^3 ≈ 4 yd^3

MH 155C TO MH 156 (F ST.)

TRENCH

300 ft x 5 ft x 5 ft = 7500 ft^3 ≈ 275 yd^3

MH PITS

20 ft^2 x 5 ft = 100 ft^3 x (2 MH) = 200 ft^3 ≈ 7 yd^3

SCHOOR DEPALMA
Engineers and Consultants

JOB NO.
SHEET 20 OF
PROJECT:
SUBJECT:
COMPUTED BY: DATE
CHECKED BY: DATE

MH 157 TO MH 158 (G ST.)

TRENCH

450 ft × 5 ft × 5 ft = 11250 ft³ ≈ 415 yd³

MH PITS

20 ft² × 5 ft = 100 ft³ × (1 MH) = 100 ft³ ≈ 4 yd³

MH 159/160 TO MH 161 (BAY VIEW AVE)

TRENCH

350 ft × 4 ft × 5 ft = 7000 ft³ ≈ 260 yd³

MH PITS

20 ft² × 4 ft = 80 ft³ × (3 MHs) = 240 ft³ ≈ 9 yd³

MH 161 TO MH 163 (H ST.)

TRENCH

575 ft × 5 ft × 5 ft = 14375 ft³ ≈ 530 yd³

MH PITS

20 ft² × 5 ft = 100 ft³ × (1 MH) = 100 ft³ ≈ 4 yd³

SCHOOR DEPALMA
Engineers and Consultants

JOB NO. SHEET 21 OF
PROJECT:
SUBJECT:
COMPUTED BY: DATE
CHECKED BY: DATE

MH 168A TO MH 169 (I ST.)

TRENCH

600 ft x 5 ft x 5 ft = 15000 ft^3 ≈ 555 yd^3

MH PITS

20 ft^2 x 5 ft = 100 ft^3 x (2 MHs) = 200 ft^3 ≈ 7 yd^3

MH 186 TO MH 187 (BERKELEY LANE)

TRENCH

150 ft x 4 ft x 5 ft = 3000 ft^3 ≈ 110 yd^3

MH PITS

20 ft^2 x 4 ft = 80 ft^3 x (1 MH) = 80 ft^3 ≈ 3 yd^3

MH 185 TO MH 188 (L ST.)

TRENCH ~~20000 ft^3 ≈ 740 yd^3~~

500 ft x 8 ft x 5 ft = 20000 ft^3 ≈ 740 yd^3

MH PITS

20 ft^2 x 8 ft = 160 ft^3 x (2 MH) = 320 ft^3 ≈ 12 yd^3

SCHOOR DEPALMA
Engineers and Consultants

JOB NO.
SHEET 22 OF
PROJECT:
SUBJECT:
COMPUTED BY: DATE
CHECKED BY: DATE

MH 189 TO MH 190 (LAKE AVE)

TRENCH

$200\ ft \times 5\ ft \times 5\ ft = 5000\ ft^3 \approx 185\ yd^3$

MH PITS

$20\ ft^2 \times 5\ ft = 100\ ft^3 \times (2\ MH) = 200\ ft^3 \approx 7\ yd^3$

MH 190 TO MH 192 (M ST.)

TRENCH

$575\ ft \times 8\ ft \times 5\ ft = 23000\ ft^3 \approx 850\ yd^3$

MH PITS

$20\ ft^2 \times 8\ ft = 160\ ft^3 \times (2\ MH) = 320\ ft^3 \approx 12\ yd^3$

MH 241/245 TO MH 246 (N ST.)

TRENCH

$1440\ ft \times 5\ ft \times 5\ ft = 36000\ ft^3 \approx 1335\ yd^3$

MH PITS

$20\ ft^2 \times 5\ ft = 100\ ft^3 \times (7\ MHs) = 700\ ft^3 \approx 26\ yd^3$

SCHOOR DEPALMA
Engineers and Consultants

JOB NO.
SHEET 23 OF
PROJECT:
SUBJECT:
COMPUTED BY: DATE
CHECKED BY: DATE

MH 246 TO MH 248 (N ST.)

TRENCH

650 ft x 8 ft x 5 ft = 26000 ft³ ≈ 960 yd³

MH PITS

20 ft² x 8 ft = 160 ft³ x (2 MHs) = 320 ft³ ≈ 12 yd³

MH 249 TO MH 253 (O ST.)

TRENCH

1350 ft x 5 ft x 5 ft = 33750 ft³ ≈ 1250 yd³

MH PITS

20 ft² x 5 ft = 100 ft³ x (6 MHs) = 600 ft³ ≈ 22 yd³

MH 253 TO MH 255 (O ST.)

TRENCH

675 ft x 7 ft x 5 ft = 23625 ft³ ≈ 875 yd³

MH PITS

20 ft² x 7 ft = 140 ft³ x (2 MHs) = 280 ft³ ≈ 10 yd³

SCHOOR DEPALMA
Engineers and Consultants

JOB NO.
SHEET 24 OF
PROJECT:
SUBJECT:
COMPUTED BY: DATE
CHECKED BY: DATE

MH 257 TO MH 269 (LAFAYETTE AVE)

TRENCH

$400\ ft \times 6\ ft \times 5\ ft = 12000\ ft^3 \approx 445\ yd^3$

MH PITS

$20\ ft^2 \times 6\ ft = 120\ ft^3 \times (2\ MHs) = 240\ ft^3 \approx 9\ yd^3$

MH 269A TO MH 269 (BAY VIEW AVE)

TRENCH

$150\ ft \times 5\ ft \times 5\ ft = 3750\ ft^3 \approx 140\ yd^3$

MH PITS

$20\ ft^2 \times 5\ ft = 100\ ft^3 \times (1\ MH) = 100\ ft^3 \approx 4\ yd^3$

MH 269 TO MH 270 (LAFAYETTE AVE)

TRENCH

$200\ ft \times 7\ ft \times 5\ ft = 7000\ ft^3 \approx 260\ yd^3$

MH PITS

$20\ ft^2 \times 7\ ft = 140\ ft^3 \times (1\ MH) = 140\ ft^3 \approx 5\ yd^3$

SCHOOR DEPALMA
Engineers and Consultants

JOB NO.
SHEET 25 OF
PROJECT:
SUBJECT:
COMPUTED BY: DATE
CHECKED BY: DATE

MH 259 TO MH 268 (DECATUR AVE)

TRENCH

$400\,ft \times 6\,ft \times 5\,ft = 12000\,ft^3 \approx 445\,yd^3$

MH PITS

$20\,ft^2 \times 6\,ft = 120\,ft^3 \times (2\,MHs) = 240\,ft^3 \approx 9\,yd^3$

MH 261 TO MH 267 (STOCKTON AVE)

TRENCH

$400\,ft \times 5\,ft \times 5\,ft = 10000\,ft^3 \approx 370\,yd^3$

MH PITS

$20\,ft^2 \times 5\,ft = 100\,ft^3 \times (2\,MHs) = 200\,ft^3 \approx 7\,yd^3$

MH 263 TO MH 266 (FARRAGUT AVE)

TRENCH

$400\,ft \times 6\,ft \times 5\,ft = 12000\,ft^3 \approx 445\,yd^3$

MH PITS

$20\,ft^2 \times 6\,ft = 120\,ft^3 \times (2\,MHs) = 240\,ft^3 \approx 9\,yd^3$

SCHOOR DEPALMA
Engineers and Consultants

JOB NO.
SHEET 26 OF
PROJECT:
SUBJECT:
COMPUTED BY: DATE
CHECKED BY: DATE

MH 265 TO MH 269 (BAY VIEW AVE)

TRENCH

$950\ ft \times 7\ ft \times 5\ ft = 33250\ ft^3 = 1230\ yd^3$

MH PITS

$20\ ft^2 \times 7\ ft = 140\ ft^3 \times (4\ MHs) = 560\ ft^3 \approx 21\ yd^3$

MH 307 TO MH 305 (CENTRAL AVE)

TRENCH

$625\ ft \times 5\ ft \times 5\ ft = 15625\ ft^3 \approx 580\ yd^3$

MH PITS

$20\ ft^2 \times 5\ ft = 100\ ft^3 \times (3\ MHs) = 300\ ft^3 \approx 11\ yd^3$

PHASE II TOTAL = $18004\ yd^3$

SAY = $18000\ yd^3$

BANKRUN SAND AND GRAVEL BACKFILL

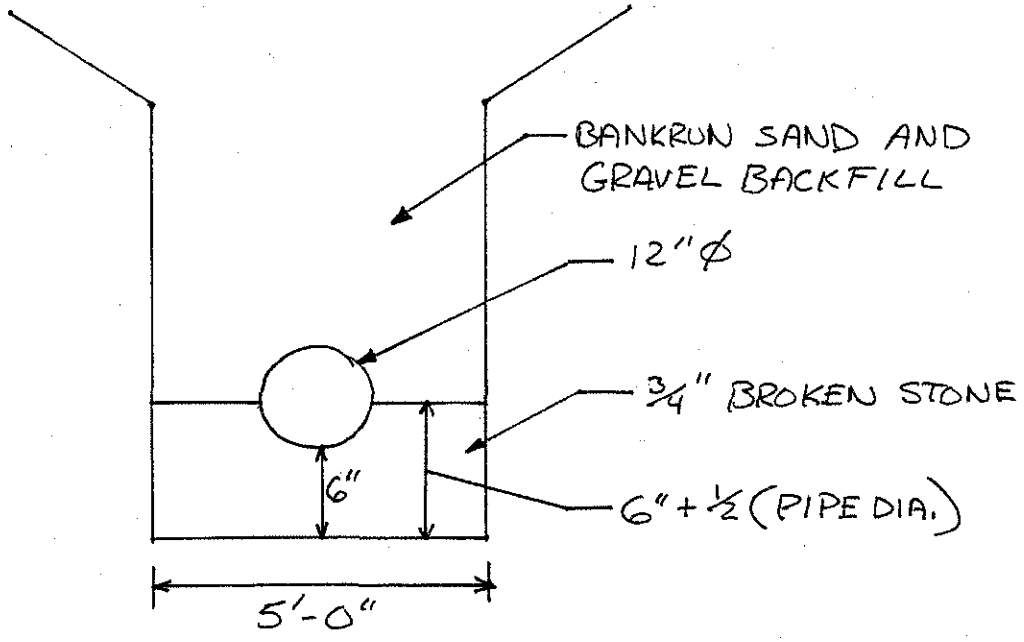

3/4" BROKEN STONE

$6'' + \frac{1}{2}(12'') = 12''$

- 16,765 LF PROPOSED PIPE FOR PHASE II

$1ft \times 16765\,ft \times 5\,ft = 83\,825\,ft^3 \approx 3104.63\,yd^3$

- 74 TOTAL MANHOLES PROPOSED FOR PHASE II (SD STANDARD 12" MIN OF 3/4" BROKEN STONE BASE)

$1ft \times {}^{*}20\,ft^2 = 20\,ft^3 \times (74\,MHs) = 1480\,ft^3 \approx 54.81\,yd^3$

$3104.63 + 54.81 = 3159.44\,yd^3$ SAY $3200\,yd^3$

* MANHOLE PIT CALCULATIONS SEE SHEET

SCHOOR DEPALMA
Engineers and Consultants

JOB NO.
SHEET 28 OF
PROJECT:
SUBJECT:
COMPUTED BY: DATE
CHECKED BY: DATE

SIDEWALK

- ASSUMED 4 ft WIDE SIDEWALKS
- 1000 LF OF PIPE PROPOSED IN SIDEWALK IN PHASE II

  1000 ft × 4 ft = 4000 ft² ≈ 445 yd²
- ASSUMED 5 ft × 4 ft CONCRETE APRONS (SIDEWALK)
- 7 SIDEWALK CORNERS IN PHASE II

  5 ft × 4 ft = 20 ft²/corner × 7 corners = 140 ft² ≈ 16 yd²
- ASSUMED 10 ft × 4 ft CONCRETE APRONS (DRIVEWAYS)
- 6 EXISTING DRIVEWAYS IN PHASE II

  10 ft × 4 ft = 40 ft²/driveway × 6 driveways = 240 ft² ≈ 27 yd²

DGA AND BITUMINOUS MIXES

- ONLY BOROUGH ROADS EFFECTED IN PHASE II
- BOROUGH ROAD STANDARDS : 4" SURFACE COURSE (MIX I-2)
  6" DGA
-
- 15765 LF OF DISTURBED PAVEMENT IN PHASE II
- ASSUMING 5 ft TRENCH (PLUS 6" MIN EACH SIDE OF TRENCH)

$15765\ ft \times 6\ ft = 94590\ ft^2 \approx 10510\ yd^2$

- DGA CALCULATION FOR PAVEMENT

$15765\ ft \times 5\ ft \times (6/12)\ ft = 39413\ ft^3 \approx 1460\ yd^3$

- NEW SIDEWALK/CONCRETE APRONS IN PHASE II EQUALS $490\ yd^2 \approx 4410\ ft^2$
- DGA CALCULATION FOR SIDEWALK

$4410\ ft^2 \times (6/12)\ ft = 2205\ ft^3 \approx 82\ yd^3$

$1460 + 82 = 1542\ yd^3$

SCHOOR DEPALMA
Engineers and Consultants

JOB NO.
SHEET 30 OF
PROJECT:
SUBJECT:
COMPUTED BY: DATE
CHECKED BY: DATE

BANKRUN SAND AND GRAVEL BACKFILL

- OVERALL PHASE II EXCAVATION 18000 yd^3
- OVERALL PHASE II 3/4" STONE BACKFILL 3160 yd^3

$18000 - 3160 = 14840\ yd^3$

- OVERALL PHASE II PAVEMENT RESTORATION IS 78825 ft^2 AND 10 in. IN DEPTH

$78825\ ft^2 \times (10/12) = 65688\ ft^3 \approx 2433\ yd^3$

$14840 - 2433 = 12407\ yd^3$

SCHOOR DEPALMA
Engineers and Consultants

JOB NO. SHEET 31 OF
PROJECT:
SUBJECT:
COMPUTED BY: DATE
CHECKED BY: DATE

SEASIDE PARK SANITARY SEWER
FEASIBILITY STUDY / CONCEPTUAL DESIGN
COST OPINION - PHASE III

EXCAVATION CALCULATIONS

MH 302 TO MH 304 (PORTER AVE)

TRENCH

650 ft × 5 ft × 5 ft = 16250 ft³ ≈ 602 yd³

MH PITS

20 ft² × 5 ft = 100 ft³ × (4 MHs) = 400 ft³ ≈ 15 yd³

MH 292 TO MH 299 (FARRAGUT AVE)

TRENCH

900 ft × 5 ft × 5 ft = 22500 ft³ ≈ 833 yd³

MH PITS

20 ft² × 5 ft = 100 ft³ × (4 MHs) = 400 ft³ ≈ 15 yd³

SCHOOR DEPALMA
Engineers and Consultants

JOB NO.
SHEET 32 OF
PROJECT:
SUBJECT:
COMPUTED BY: DATE
CHECKED BY: DATE

MH 296/297 TO MH 298 (BOULEVARD)

TRENCH

$400\ ft \times 5\ ft \times 5\ ft = 10000\ ft^3 \approx 370\ yd^3$

MH PITS

$20\ ft^2 \times 5\ ft = 100\ ft^3 \times (2\ MH) = 200\ ft^3 \approx 7\ yd^3$

MH 288 TO MH 291 (STOCKTON)

TRENCH

$950\ ft \times 6\ ft \times 5\ ft = 28500\ ft^3 \approx 1056\ yd^3$

MH PITS

$20\ ft^2 \times 6\ ft = 120\ ft^3 \times (5\ MHs) = 600\ ft^3 \approx 22\ yd^3$

MH 286/287 TO MH 288 (OCEAN)

TRENCH

$400\ ft \times 5\ ft \times 5\ ft = 10000\ ft^3 \approx 370\ yd^3$

MH PITS

$20\ ft^2 \times 5\ ft = 100\ ft^3 \times (2\ MHs) = 200\ ft^3 \approx 7\ yd^3$

MH 277 TO MH 285 (DECATUR AVE)

TRENCH

$800\ ft \times 6\ ft \times 5\ ft = 24000\ ft^3 \approx 889\ yd^3$

MH PITS

$20\ ft^2 \times 6\ ft = 120\ ft^3 \times (4\ MHs) = 480\ ft^3 \approx 18\ yd^3$

MH 282/283 TO MH 284 (BOULEVARD)

TRENCH

$400\ ft \times 5\ ft \times 5\ ft = 10000\ ft^3 \approx 370\ yd^3$

MH PITS

$20\ ft^2 \times 5\ ft = 100\ ft^3 \times (2\ MHs) = 200\ ft^3 \approx 7\ yd^3$

MH 273 TO MH 276 (LAFAYETTE AVE)

TRENCH

$950\ ft \times 6\ ft \times 5\ ft = 28500\ ft^3 \approx 1056\ yd^3$

MH PITS

$20\ ft^2 \times 6\ ft = 120\ ft^3 \times (4\ MHs) = 480\ ft^3 \approx 18\ yd^3$

SCHOOR DEPALMA
Engineers and Consultants

JOB NO. SHEET 34 OF
PROJECT:
SUBJECT:
COMPUTED BY: DATE
CHECKED BY: DATE

MH 271/272 TO MH 273 (OCEAN AVE)

TRENCH

350 ft x 5 ft x 5 ft = 8750 ft³ ≈ 324 yd³

MH PITS

20 ft² x 5 ft = 100 ft³ x (2 MHs) = 200 ft³ ≈ 7 yd³

MH 232 TO MH 239 (O ST.)

TRENCH

900 ft x 5 ft x 5 ft = 22500 ft³ ≈ 833 yd³

MH PITS

20 ft² x 5 ft = 100 ft³ x (4 MHs) = 400 ft³ ≈ 15 yd³

MH 236/237 TO MH 238 (BOULEVARD)

TRENCH

400 ft x 5 ft x 5 ft = 10000 ft³ ≈ 370 yd³

MH PITS

20 ft² x 5 ft = 100 ft³ x (2 MHs) = 200 ft³ ≈ 7 yd³

SCHOOR DEPALMA
Engineers and Consultants

JOB NO.
SHEET 35 OF
PROJECT:
SUBJECT:
COMPUTED BY: DATE
CHECKED BY: DATE

MH 226/227 TO MH 231 (N ST.)

TRENCH

$1250\ ft \times 5\ ft \times 5\ ft = 31250\ ft^3 \approx 1157\ yd^3$

MH PITS

$20\ ft^2 \times 5\ ft = 100\ ft^3 \times (6\ MHs) = 600\ ft^3 \approx 22\ yd^3$

MH 218/223/222 TO MH 225 (M ST./BOULEVARD)

TRENCH

$1250\ ft \times 6\ ft \times 5\ ft = 37500\ ft^3 \approx 1389\ yd^3$

MH PITS

$20\ ft^2 \times 6\ ft = 120\ ft^3 \times (6\ MHs) = 720\ ft^3 \approx 27\ yd^3$

MH 212/213/214 TO MH 217 (L ST./OCEAN AVE)

TRENCH

$1350\ ft \times 5\ ft \times 5\ ft = 33750\ ft^3 \approx 1250\ yd^3$

MH PITS

$20\ ft^2 \times 5\ ft = 100\ ft^3 \times (6\ MHs) = 600\ ft^3 \approx 22\ yd^3$

SCHOOR DEPALMA
Engineers and Consultants

JOB NO.
SHEET 36 OF
PROJECT:
SUBJECT:
COMPUTED BY: DATE
CHECKED BY: DATE

MH 201 TO MH 211 (K ST.)

TRENCH

$850\,ft \times 6\,ft \times 5\,ft = 25500\,ft^3 \approx 944\,yd^3$

MH PITS

$20\,ft^2 \times 6\,ft = 120\,ft^3 \times (4\,MHs) = 480\,ft^3 \approx 18\,yd^3$

MH 193/196/202 TO MH 206 (J ST. / BOULEVARD)

TRENCH

$1700\,ft \times 6\,ft \times 5\,ft = 51000\,ft^3 \approx 1889\,yd^3$

MH PITS

$20\,ft^2 \times 6\,ft = 120\,ft^3 \times (7\,MHs) = 840\,ft^3 \approx 31\,yd^3$

MH 164 TO MH 167 (I ST.)

TRENCH

$800\,ft \times 5\,ft \times 5\,ft = 20000\,ft^3 \approx 741\,yd^3$

MH PITS

$20\,ft^2 \times 5\,ft = 100\,ft^3 \times (3\,MHs) = 300\,ft^3 \approx 11\,yd^3$

SCHOOR DEPALMA
Engineers and Consultants

JOB NO. SHEET 37 OF
PROJECT:
SUBJECT:
COMPUTED BY: DATE
CHECKED BY: DATE

MH 142/143/144 TO MH 146 (H ST./OCEAN AVE)

TRENCH

$1250\ ft \times 5\ ft \times 5\ ft = 31250\ ft^3 \approx 1157\ yd^3$

MH PITS

$20\ ft^2 \times 5\ ft = 100\ ft^3 \times (5\ MHs) = 500\ ft^3 \approx 19\ yd^3$

MH 139 TO MH 141A (G ST.)

TRENCH

$750\ ft \times 5\ ft \times 5\ ft = 18750\ ft^3 \approx 694\ yd^3$

MH PITS

$20\ ft^2 \times 5\ ft = 100\ ft^3 \times (3\ MHs) = 300\ ft^3 = 11\ yd^3$

MH 134/135/136 TO MH 138 (F ST./OCEAN)

TRENCH

$1250\ ft \times 5\ ft \times 5\ ft = 31250\ ft^3 \approx 1157\ yd^3$

MH PITS

$20\ ft^2 \times 5\ ft = 100\ ft^3 \times (5\ MHs) = 500\ ft^3 \approx 19\ yd^3$

MH 130 TO MH 132 (E ST.)

TRENCH

750 ft × 5 ft × 5 ft = 18750 ft³ ≈ 694 yd³

MH PITS

20 ft² × 5 ft = 100 ft³ × (3 MHs) = 300 ft³ ≈ 11 yd³

MH 125/126/127 TO MH 129 (D ST. / OCEAN AVE)

TRENCH

1175 ft × 5 ft × 5 ft = 29375 ft³ ≈ 1088 yd³

MH PITS

20 ft² × 5 ft = 100 ft³ × (5 MHs) = 500 ft³ ≈ 19 yd³

MH 114 TO MH 116 (C ST.)

TRENCH

675 ft × 6 ft × 5 ft = 20250 ft³ ≈ 750 yd³

MH PITS

20 ft² × 6 ft = 120 ft³ × (3 MHs) = 360 ft³ ≈ 13 yd³

SCHOOR DEPALMA
Engineers and Consultants

JOB NO.
SHEET 39 OF
PROJECT:
SUBJECT:
COMPUTED BY: DATE
CHECKED BY: DATE

MH 109/110/111 TO MH 113 (BRIGHTON/OCEAN AVE)

TRENCH

$1125\ ft \times 5\ ft \times 5\ ft = 28125\ ft^3 \approx 1042\ yd^3$

MH PITS

$20\ ft^2 \times 5\ ft = 100\ ft^3 \times (5\ MHs) = 500\ ft^3 \approx 19\ yd^3$

MH 107 TO MH 108 (ISLAND AVE)

TRENCH

$675\ ft \times 4\ ft \times 5\ ft = 13500\ ft^3 \approx 500\ yd^3$

MH PITS

$20\ ft^2 \times 4\ ft = 80\ ft^3 \times (3\ MHs) = 240\ ft^3 \approx 9\ yd^3$

MH 104 TO MH 106 (NORTH AVE)

TRENCH

$675\ ft \times 5\ ft \times 5\ ft = 16875\ ft^3 \approx 625\ yd^3$

MH PITS

$20\ ft^2 \times 5\ ft = 100\ ft^3 \times (3\ MHs) = 300\ ft^3 \approx 11\ yd^3$

SCHOOR DEPALMA
Engineers and Consultants

JOB NO.
SHEET 40 OF
PROJECT:
SUBJECT:
COMPUTED BY: DATE
CHECKED BY: DATE

MH 98 TO MH 99 (2nd AVE)

TRENCH

825 ft × 5 ft × 5 ft = 20625 ft³ ≈ 764 yd³

MH PITS

20 ft² × 5 ft = 100 ft³ × (4 MHs) = 400 ft³ ≈ 15 yd³

MH 95 TO MH 94 (4th AVE)

TRENCH

1025 ft × 4 ft × 5 ft = 20500 ft³ ≈ 759 yd³

MH PITS

20 ft² × 4 ft = 80 ft³ × (5 MHs) = 400 ft³ ≈ 15 yd³

MH 16B TO MH 16A (5th AVE)

TRENCH

600 ft × 4 ft × 5 ft = 12000 ft³ ≈ 444 yd³

MH PITS

20 ft² × 4 ft = 80 ft³ × (3 MHs) = 240 ft³ ≈ 9 yd³

SCHOOR DEPALMA
Engineers and Consultants

JOB NO.
SHEET 41 OF
PROJECT:
SUBJECT:
COMPUTED BY: DATE
CHECKED BY: DATE

MH 88 TO MH 89 (8th AVE)

TRENCH

$675\ ft \times 7\ ft \times 5\ ft = 23625\ ft^3 \approx 875\ yd^3$

MH PITS

$20\ ft^2 \times 7\ ft = 140\ ft^3 \times (3\ MHs) = 420\ ft^3 \approx 16\ yd^3$

MH 83/84/85 TO MH 86 (9th AVE/OCEAN AVE)

TRENCH

$550\ ft \times 4\ ft \times 5\ ft = 11000\ ft^3 \approx 407\ yd^3$

MH PITS

$20\ ft^2 \times 4\ ft = 80\ ft^3 \times (4\ MHs) = 320\ ft^3 \approx 12\ yd^3$

MH 81 TO MH 82 (10th AVE)

TRENCH

$725\ ft \times 5\ ft \times 5\ ft = 18125\ ft^3 = 671\ yd^3$

MH PITS

$20\ ft^2 \times 5\ ft = 100\ ft^3 \times (3\ MHs) = 300\ ft^3 \approx 11\ yd^3$

MH 76/77/78 TO MH 80 (11th/OCEAN AVE)

TRENCH

1000 ft x 5 ft x 5 ft = 25000 ft^3 ≈ 926 yd^3

MH PITS

20 ft^2 x 5 ft = 100 ft^3 x (5 MHs) = 500 ft^3 ≈ 19 yd^3

MH 72 TO MH 75 (12th AVE)

TRENCH

675 ft x 5 ft x 5 ft = 16875 ft^3 ≈ 625 yd^3

MH PITS

20 ft^2 x 5 ft = 100 ft^3 x (3 MHs) = 300 ft^3 ≈ 11 yd^3

MH 67/68/69 TO MH 71 (13th/OCEAN AVE)

TRENCH

1075 ft x 4 ft x 5 ft = 21500 ft^3 ≈ 796 yd^3

MH PITS

20 ft^2 x 4 ft = 80 ft^3 x (5 MHs) = 400 ft^3 ≈ 15 yd^3

SCHOOR DEPALMA
Engineers and Consultants

JOB NO.
SHEET 43 OF
PROJECT:
SUBJECT:
COMPUTED BY: DATE
CHECKED BY: DATE

MH 64 TO MH 66 (14th AVE)

TRENCH

$675\ ft \times 4\ ft \times 5\ ft = 13500\ ft^3 \approx 500\ yd^3$

MH PITS

$20\ ft^2 \times 4\ ft = 80\ ft^3 \times (3\ MHs) = 240\ ft^3 \approx 9\ yd^3$

PHASE III TOTAL $= 29449\ yd^3$

SAY $= 29500\ yd^3$

SCHOOR DEPALMA
Engineers and Consultants

JOB NO.
SHEET 44 OF
PROJECT:
SUBJECT:
COMPUTED BY: DATE
CHECKED BY: DATE

3/4" BROKEN STONE

- 30450 LF PROPOSED PIPE FOR PHASE III

$1ft \times 30450\,ft \times 5\,ft = 152250\,ft^3 \approx 5639\,yd^3$

- 145 TOTAL MANHOLES PROPOSED FOR PHASE III
  (SD STANDARD 12" MIN - 3/4" STONE BASE)

$1ft \times 20\,ft^2 = 20\,ft^3 \times (145\ MHs) = 2900\,ft^3 \approx 107\,yd^3$

$5639 + 107 = 5746\,yd^3$

DGA AND BITUMINOUS MIXES

- ONLY BOROUGH AND COUNTY ROADS EFFECTED IN PHASE III
- 25700 LF OF BOROUGH ROADS EFFECTED IN PHASE III
- 4750 LF OF COUNTY ROADS EFFECTED IN PHASE III
- ASSUMING 5 ft TRENCH (PLUS 6" MIN. ON EACH SIDE OF TRENCH)
- COUNTY ROAD STANDARD: 2" SURFACE COURSE (MIX I-5)
  6" BASE COURSE (MIX I-2)
  6" DGA
- BOROUGH COUNTY ROAD STANDARD: 4" SURFACE COURSE (MIX I-2)
  6" DGA

$25700\ ft \times 6\ ft = 154200\ ft^2 = 17133\ yd^2$

$4750\ ft \times 6\ ft = 28500\ ft^2 = 3167\ yd^2$

$17133 + 3167 = 20800\ yd^2$

- DGA CALCULATION FOR PAYMENT

$$\left[25700 \times 6 \times \left(\tfrac{6}{12}\right)\right] + \left[4750 \times 6 \times \left(\tfrac{6}{12}\right)\right] = 91350\ ft^3 \approx 3383\ yd^3$$

BANKRUN SAND AND GRAVEL BACKFILL

- OVERALL PHASE III EXCAVATION 29449 yd^3
- OVERALL PHASE III 3/4" BROKEN STONE 5746 yd^3

$29449 - 5746 = 23703\ yd^3$

- OVERALL PHASE III PAVEMENT RESTORATION

BOROUGH

$154200\ ft^2 \times (10/12)\ ft = 128500\ ft^3 \approx 4759\ yd^3$

COUNTY

$28500\ ft^2 \times (14/12)\ ft = 33250\ ft^3 \approx 1231\ yd^3$

$4759 + 1231 = 5990\ yd^3$

$23703 - 5990 = 17713\ yd^3$

APPENDIX F

WATERCAD ANALYSIS

Borough of Seaside Park
Water Distribution and Sanitary Sewer Improvements
Hydrant Flow Tests

Flow Test #1	
P(static)	45 psi
P(resid.)	40 psi
Q(flow)	960 gpm
Q(resid.)	2289 gpm
Resid. Hydrant Year	1995
Flow Hydrant Year	1965
Resid. Hyd. Location	intersection of 9th Ave and Ocean Ave, north of 9th Ave
Flow Hyd. Location	intersection of 7th Ave and Ocean Ave, north of 7th Ave
Rounded Down to the nearest 250gpm = **2,250 gpm**	
if residual pressure is... (psi)	then available flow is... (gpm)
45	0.00
44	402.56
43	585.31
42	728.57
41	851.02
40	960.00
39	1059.32
37	1237.36
35	1395.81
33	1540.23
31	1673.93
30	1737.47
25	2029.47
20	2289.36
15	2526.23
10	2745.52
0	3144.58

Flow Test #2	
P(static)	53 psi
P(resid.)	49 psi
Q(flow)	725 gpm
Q(resid.)	2266 gpm
Resid. Hydrant Year	1947
Flow Hydrant Year	1985
Resid. Hyd. Location	intersection of 4th Ave and Central Ave, south of 4th Ave
Flow Hyd. Location	intersection of 4th Ave and Ocean Ave, south of 4th Ave
Rounded Down to the nearest 250gpm = **2,250 gpm**	
if residual pressure is... (psi)	then available flow is... (gpm)
53	0.00
52	342.95
51	498.63
50	620.68
48	817.84
46	980.80
44	1123.35
42	1251.92
40	1370.11
35	1633.33
30	1864.48
25	2073.44
20	2265.81
15	2445.17
10	2613.96
0	2926.41

Flow Test #3	
P(static)	53.5 psi
P(resid.)	50 psi
Q(flow)	1030 gpm
Q(resid.)	3488 gpm
Resid. Hydrant Year	1987
Flow Hydrant Year	1987
Resid. Hyd. Location	intersection of 3rd Ave and Bayview Ave, north of 3rd Ave
Flow Hyd. Location	intersection of 1st Ave and Bayview Ave, north of 1st Ave
Rounded Down to the nearest 250gpm = **3,250 gpm**	
if residual pressure is... (psi)	then available flow is... (gpm)
53.5	0.00
53	360.15
52	651.82
51	858.87
50	1030.00
48	1314.73
46	1554.44
44	1766.08
42	1958.02
40	2135.11
35	2531.12
30	2880.16
25	3196.37
20	3487.91
15	3760.01
10	4016.29
0	4491.09

Flow Test #4	
P(static)	53 psi
P(resid.)	26 psi
Q(flow)	395 gpm
Q(resid.)	440 gpm
Resid. Hydrant Year	1992
Flow Hydrant Year	1966
Resid. Hyd. Location	near the intersection of K St and Central Ave, south of K St
Flow Hyd. Location	end of K St, west of Berkeley Lane
Rounded Down to the nearest 250gpm = **250 gpm**	
if residual pressure is... (psi)	then available flow is... (gpm)
53	0.00
52	66.63
51	96.88
50	120.59
48	158.89
46	190.55
44	218.25
42	243.23
40	266.19
35	317.33
30	362.24
25	402.83
20	440.21
15	475.05
10	507.85
0	568.55

Borough of Seaside Park
Water Distribution and Sanitary Sewer Improvements
Hydrant Flow Tests

Flow Test #5	
P(static)	52 psi
P(resid.)	45 psi
Q(flow)	880 gpm
Q(resid.)	1999 gpm
Resid. Hydrant Year	?
Flow Hydrant Year	1959
Resid. Hyd. Location	near the intersection of J St and the Blvd, near well house
Flow Hyd. Location	intersection of L St and the Blvd, south of L St
Rounded Down to the nearest 250gpm = **1,750 gpm**	
if residual pressure is...	then available flow is...
(psi)	(gpm)
52	0.00
51	307.70
50	447.39
48	650.49
46	809.71
44	945.80
42	1066.91
40	1177.30
35	1420.93
30	1633.19
25	1824.17
20	1999.45
15	2162.51
10	2315.71
0	2598.79

Flow Test #6	
P(static)	53 psi
P(resid.)	43 psi
Q(flow)	865 gpm
Q(resid.)	1648 gpm
Resid. Hydrant Year	1968
Flow Hydrant Year	1969
Resid. Hyd. Location	intersection of N St and the Blvd, south of N St
Flow Hyd. Location	intersection of L St and Central Ave, south of L St
Rounded Down to the nearest 250gpm = **1,500 gpm**	
if residual pressure is...	then available flow is...
(psi)	(gpm)
53	0.00
52	249.47
51	362.72
50	451.50
48	594.92
46	713.46
44	817.16
42	910.68
40	996.66
35	1188.13
30	1356.28
25	1508.28
20	1648.21
15	1778.69
10	1901.47
0	2128.75

Flow Test #7	
P(static)	54 psi
P(resid.)	53 psi
Q(flow)	455 gpm
Q(resid.)	3055 gpm
Resid. Hydrant Year	1992
Flow Hydrant Year	?
Resid. Hyd. Location	intersection of O St and Lake Ave, south of O St
Flow Hyd. Location	O St, west of Lake Ave and south of Barnegat Bay
Rounded Down to the nearest 250gpm = **3,000 gpm**	
if residual pressure is...	then available flow is...
(psi)	(gpm)
54	0.00
53	455.00
52	661.56
51	823.49
50	961.89
48	1197.33
46	1398.56
44	1577.65
42	1740.88
40	1892.00
35	2231.20
30	2531.19
25	2803.54
20	3054.99
15	3289.93
10	3511.36
0	3921.97

Flow Test #8	
P(static)	53 psi
P(resid.)	52 psi
Q(flow)	1060 gpm
Q(resid.)	7003 gpm
Resid. Hydrant Year	1947
Flow Hydrant Year	1991
Resid. Hyd. Location	intersection of Bayview Ave & Decatur Ave, east of Bayview
Flow Hyd. Location	intersection of Bayview Ave & Stockton Ave, east of Bayview
Rounded Down to the nearest 250gpm = **7,000 gpm**	
if residual pressure is...	then available flow is...
(psi)	(gpm)
53	0.00
52	1060.00
51	1541.21
50	1918.45
48	2527.84
46	3031.51
44	3472.14
42	3869.53
40	4234.82
35	5048.39
30	5762.87
25	6408.72
20	7003.31
15	7557.69
10	8079.39
0	9045.13

Borough of Seaside Park
Water Distribution and Sanitary Sewer Improvements
Hydrant Flow Tests

Flow Test #9	
P(static)	49 psi
P(resid.)	40 psi
Q(flow)	920 gpm
Q(resid.)	1731 gpm
Resid. Hydrant Year	1995
Flow Hydrant Year	1965
Resid. Hyd. Location	intersection of Farraguat Ave & Ocean Ave, north of Farraguat
Flow Hyd. Location	intersection of Stockton Ave & Ocean Ave, north of Stockton
Rounded Down to the nearest 250gpm = **1,500 gpm**	

if residual pressure is... (psi)	then available flow is... (gpm)
49	0.00
48	280.86
47	408.37
46	508.33
45	593.76
43	739.09
41	863.31
40	920.00
35	1167.90
30	1377.28
25	1562.47
20	1730.58
15	1885.80
10	2030.82
0	2297.22

Flow Test #10	
P(static)	52 psi
P(resid.)	50.5 psi
Q(flow)	1060 gpm
Q(resid.)	5533 gpm
Resid. Hydrant Year	1995
Flow Hydrant Year	1987
Resid. Hyd. Location	13th Ave, south of the Seaside Park Dept. of Public Works
Flow Hyd. Location	intersection of Bayview Ave & 13th Ave, north of 13th Ave
Rounded Down to the nearest 250gpm = **5,500 gpm**	

if residual pressure is... (psi)	then available flow is... (gpm)
52	0.00
51	851.56
50	1238.15
48	1800.23
46	2240.88
44	2617.49
42	2952.68
40	3258.18
35	3932.41
30	4519.86
25	5048.39
20	5533.47
15	5984.74
10	6408.72
0	7192.14

APPENDIX G

RECENT SANITARY SEWER REPAIRS/REPLACEMENTS

BOROUGH OF SEASIDE PARK
FEASIBILITY STUDY / CONCEPTUAL PLAN
WATER DISTRIBUTION AND SANITARY SEWER IMPROVEMENTS
RECENT SANITARY SEWER REPAIRS

Prepared September 21, 2006

STREET REPAIRED	FROM	TO
14th AVENUE	BARNEGAT AVENUE	BAYVIEW AVENUE
BARNEGAT AVENUE	14th AVENUE	13th AVENUE
BAY VIEW AVENUE	14th AVENUE	13th AVENUE
13th AVENUE	BARNEGAT AVENUE	BAYVIEW AVENUE
12th AVENUE	BARNEGAT AVENUE	BAYVIEW AVENUE
11th AVENUE	BARNEGAT AVENUE	BAYVIEW AVENUE
10th AVENUE	ALONG	BAYVIEW AVENUE
7th AVENUE	OCEAN AVENUE	CENTRAL AVENUE
6th AVENUE	OCEAN AVENUE	CENTRAL AVENUE
CENTRAL AVENUE	7th AVENUE	6th AVENUE
3rd AVENUE	CENTRAL AVENUE	OCEAN AVENUE
1st AVENUE	CENTRAL AVENUE	OCEAN AVENUE
NORTH AVENUE	CENTRAL AVENUE	BAYVIEW AVENUE
BRIGHTON AVENUE	ALONG	BAYVIEW AVENUE
D STREET	ALONG	BAYVIEW AVENUE
F STREET	ALONG	BAYVIEW AVENUE
J STREET	CENTRAL AVENUE	MARINA
EASEMENT THRU DPW YARD	13th STREET	12th STREET

N:\project\2006\0603661\01\feasibility study\[recent sanitary sewer repairs.xls]Sheet1

APPENDIX H

NON-ACCESSIBLE SANITARY SEWER MANHOLES

BOROUGH OF SEASIDE PARK
WATER DISTRIBUTION AND SANITARY SEWER IMPROVEMENTS
FEASIBILITY STUDY / CONCEPTUAL PLAN
NON-ACCESSIBLE SANITARY SEWER MANHOLES

Prepared August 25, 2006

MANHOLES TOTALLY PAVED OVER			
	Manhole	**Street/Avenue**	**ClosesT Intersecting Street**
1	SMH 4	13th Avenue	Bay View Avenue
2	SMH 10	14th Avenue	Central Ave. (Rt. 35)
3	SMH 11	14th Avenue	Between Central and Barnegat
4	SMH 22	11th Avenue	Bay View Avenue
5	SMH 34	7th Avenue	Ocean Avenue
6	SMH 41	4th Avenue	Central Ave. (Rt. 35)
7	SMH 52	1st Avenue	Bay View Avenue
8	SMH 54	2nd Avenue	Bay View Avenue
9	SMH 62B	6th Avenue	Bay View Avenue
10	SMH 64	14th Avenue	Ocean Avenue
11	SMH 65	14th Avenue	Between Central and Ocean
12	SMH 67	Ocean Avenue	14th Avenue
13	SMH 68	Ocean Avenue	12th Avenue
14	SMH 69	Ocean Avenue	13th Avenue
15	SMH 77	Ocean Avenue	10th Avenue
16	SMH 78	Ocean Avenue	11th Avenue
17	SMH 79	11th Avenue	Between Central and Ocean
18	SMH 83	Ocean Avenue	10th Avenue
19	SMH 85	Ocean Avenue	11th Avenue
20	SMH 88	8th Avenue	Ocean Avenue
21	SMH 91	6th Avenue	Ocean Avenue
22	SMH 98	2nd Avenue	Ocean Avenue
23	SMH 104	North Avenue	Ocean Avenue
24	SMH 107	Island Avenue	Ocean Avenue
25	SMH ?	Island Avenue	Between Central and Ocean
26	SMH 112	Brighton Avenue	Between Central and Ocean
27	SMH 115	C Street	Between Central and Ocean
28	SMH 122	C Street	Central Ave. (Rt. 35)
29	SMH 123	Central Ave. (Rt. 35)	Between C and D St.
30	SMH 125	Ocean Avenue	Between C and D St.
31	SMH 128	D Street	Between Central and Ocean
32	SMH 130	E Street	Ocean Avenue
33	SMH 131	E Street	Between Central and Ocean
34	SMH 135	Ocean Avenue	G Street
35	SMH 137	F Street	Between Central and Ocean
36	SMH 139	G Street	Ocean Avenue
37	SMH 142	Ocean Avenue	G Street
38	SMH 143	Ocean Avenue	I Street
39	SMH 144	Ocean Avenue	H Street
40	SMH 145	H Street	Between Central and Ocean
41	SMH 151	E Street	Bay View Avenue
42	SMH 158	Central Ave. (Rt. 35)	G Street
43	SMH 163	Central Ave. (Rt. 35)	H Street
44	SMH 168	I Street	Between Central and Bay View
45	SMH 168A	I Street	Bay View Avenue
46	SMH 169	Central Ave. (Rt. 35)	I Street
47	SMH 172	K Court	K Street
48	SMH 174	K Court	K Street
49	SMH 177	K Street	Between Central and Berkeley Ln.
50	SMH 179	Berkeley Lane	L Street
51	SMH 185	L Street	Berkeley Lane
52	SMH 194	Ocean Avenue	I Street
53	SMH 195	Ocean Avenue	K Street
54	SMH 196	Ocean Avenue	J Street
55	SMH 199	J Street	Boulevard
56	SMH 202	Boulevard	L Street
57	SMH 204	Boulevard	K Street
58	SMH 213	Ocean Avenue	M Street
59	SMH 219	Boulevard	L Street
60	SMH 222	Boulevard	N Street
61	SMH 223	Boulevard	L Street
62	SMH 226	Ocean Avenue	M Street
63	SMH 240	Central Ave. (Rt. 35)	Lafayette Avenue
64	SMH 248	N Street	Central Ave. (Rt. 35)
65	SMH 255	Central Ave. (Rt. 35)	O Street
66	SMH 270	Central Ave. (Rt. 35)	Lafayette Avenue
67	SMH 271	Ocean Avenue	O Street
68	SMH 272	Ocean Avenue	Lafayette Avenue
69	SMH 273	Ocean Avenue	Decatur Avenue

BOROUGH OF SEASIDE PARK
WATER DISTRIBUTION AND SANITARY SEWER IMPROVEMENTS
FEASIBILITY STUDY / CONCEPTUAL PLAN
NON-ACCESSIBLE SANITARY SEWER MANHOLES

Prepared August 25, 2006

MANHOLES PARTIALLY PAVED OVER (could not open)			
	Manhole	**Street/Avenue**	**ClosesT Intersecting Street**
1	SMH 14	13th Avenue	Barnegat Avenue
2	SMH 28	9th Avenue	Central Ave. (Rt. 35)
3	SMH 31	8th Avenue	Central Ave. (Rt. 35)
4	SMH 40	Bay View Avenue	5th Avenue
5	SMH 42	Bay View Avenue	4th Avenue
6	SMH 70	13th Avenue	Between Central and Ocean
7	SMH 72	12th Avenue	Ocean Avenue
8	SMH 73	12th Avenue	Between Central and Ocean
9	SMH 75	Central Ave. (Rt. 35)	12th Avenue
10	SMH 81	Ocean Avenue	10th Avenue
11	SMH 84	Ocean Avenue	9th Avenue
12	SMH 95	4th Avenue	Ocean Avenue
13	SMH 110	Ocean Avenue	Between C St. and Brighton Ave.
14	SMH 111	Ocean Avenue	Brighton Avenue
15	SMH 126	Ocean Avenue	Between E and D St.
16	SMH 127	Ocean Avenue	D Street
17	SMH 134	Ocean Avenue	Between E and F St.
18	SMH 136	Ocean Avenue	F Street
19	SMH 156	Central Ave. (Rt. 35)	F Street
20	SMH 164	I Street	Ocean Avenue
21	SMH 165	I Street	Between Central and Ocean
22	SMH 174A	K Court	K Street
23	SMH 187	L Street	Berkelly Lane
24	SMH 201	K Street	Ocean Avenue
25	SMH 212	Ocean Avenue	K Street
26	SMH 214	Ocean Avenue	L Street
27	SMH 229	N Street	Boulevard
28	SMH 230	N Street	Boulevard
29	SMH 232	O Street	Ocean Avenue
30	SMH 241	N Street	Berkeley Harbor
31	SMH 242	N Street	Berkeley Harbor
32	SMH 245	Lake Avenue	O Street
33	SMH 247	N Street	Central Ave. (Rt. 35)
34	SMH 251	O Street	North Harbor
35	SMH 265	Central Ave. (Rt. 35)	Bay View Avenue
36	SMH 266	Bay View Avenue	Farragut Avenue
37	SMH 267	Bay View Avenue	Stockton Avenue
38	SMH 268	Bay View Avenue	Decatur Avenue
39	SMH 274	Lafayette Avenue	Boulevard
40	SMH 275	Lafayette Avenue	Boulevard
41	SMH 277	Decatur Avenue	Ocean Avenue

MANHOLES COULD NOT BE LOCATED			
	Manhole	**Street/Avenue**	**ClosesT Intersecting Street**
1	SMH 1	14th Street	Bay View Avenue
2	SMH 76	Ocean Avenue	12th Avenue
3	SMH 96	3rd Avenue	Ocean Avenue
4	SMH 147	J Street	Boulevard
5	SMH 198	J Street	Ocean Avenue
6	SMH 208	J Street	Central Ave. (Rt. 35)

APPENDIX I

OCEAN COUNTY UTILITIES AUTHORITY
STANDARD REGULATIONS AND DETAILS

SCHOOR DEPALMA
Engineers and Consultants

September 18, 2006

Mr. Nicholas Otten
Planning Engineer
Ocean County Utilities Authority
501 Hickory Road
P.O. Box P
Bayville, New Jersey 08721

RE: Borough of Seaside Park
Water Distribution and Sanitary Sewer Improvements
Feasibility Study/Conceptual Plan
Our Project Number 060366102

Dear Mr. Otten:

On behalf of the Borough of Seaside Park, we wish to take the opportunity to thank you for providing us with the as-built mapping of the Ocean County Utilities Authority's (OCUA) interceptor sewer line within the Borough (along Central Avenue). This information will prove essential in assisting the Borough in their planning and design efforts for the proposed sanitary sewer system replacement.

Confirming our conversation, the OCUA will not allow the installation of "doghouse" manholes on their interceptor line, as the interceptor pipe material is pre-stressed reinforced concrete. However, OCUA will allow for connections to its existing manholes, through core drilling and installation of interior drop connections. As we discussed, such installation must be in accordance with the OCUA's rules and regulations and standard details (which were provided to our office).

We thank you again for your assistance. Should you have any questions concerning the Borough's sewer replacement plans, please do not hesitate to contact me at 732 577-9000, ext. 1011.

Very truly yours,

SCHOOR DEPALMA INC.

James F. McGoldrick, P.E.

JFM:jfm

cc: Robert D. Forsyth, P.E., Schoor DePalma

N:\project\2006\0603661\01\wastewater\otten 01.doc

DESIGN STANDARDS FOR CONNECTIONS/DROP CONNECTIONS TO OCUA INTERCEPTORS/MANHOLES

Any project proposing a direct connection to the OCUA interceptor system must be designed in accordance with the requirements presented below.

1. A connection can only be made to a manhole on the OCUA system. A dog house manhole or a direct connection to the interceptor will not be permitted.

2. A connection made to any manhole must generally be at the manhole bench.

3. If a drop connection is approved only an inside drop connection will be allowed. A drop connection will not be permitted in manholes less than five (5) feet in diameter or tee type manholes.

4. The minimum diameter for a connection is 8 inches.

5. Only one drop connection will be permitted in a manhole.

6. The maximum diameter of any drop connection will be 12 inches, it may be less depending on the manhole diameter, location (at bends), step location, etc.

7. The maximum height of any inside drop from the interceptor invert shall be 6 feet.

8. In manholes on straight lines, the connection must be made at right angles to the flow.

9. In manholes at bends, the connection must be oriented so its discharge is at right angles or in the direction of the existing flow.

10. Three hundred feet of gravity sewer must precede force main connections to a manhole.

11. Connections serving a single dwelling must discharge to a separate manhole before it connects to an OCUA manhole.

12. The distance between the two manholes referenced in item 11 must be a minimum of 8 feet at the pipe joining the manholes when the connection is in a roadway. When the connection is in an easement the manhole must be located outside the easement.

13. A separate detail must be included in the plans showing the specific features of the manhole to which the connection is to be made.

These requirements will be supplemented with manhole connection details and written specifications for the connection. The applicant's engineer should contact the OCUA to obtain this supplemental information.

To: Jim McGoldrick (Schoor DePalma)
FROM: Nick Otten (OCUA)

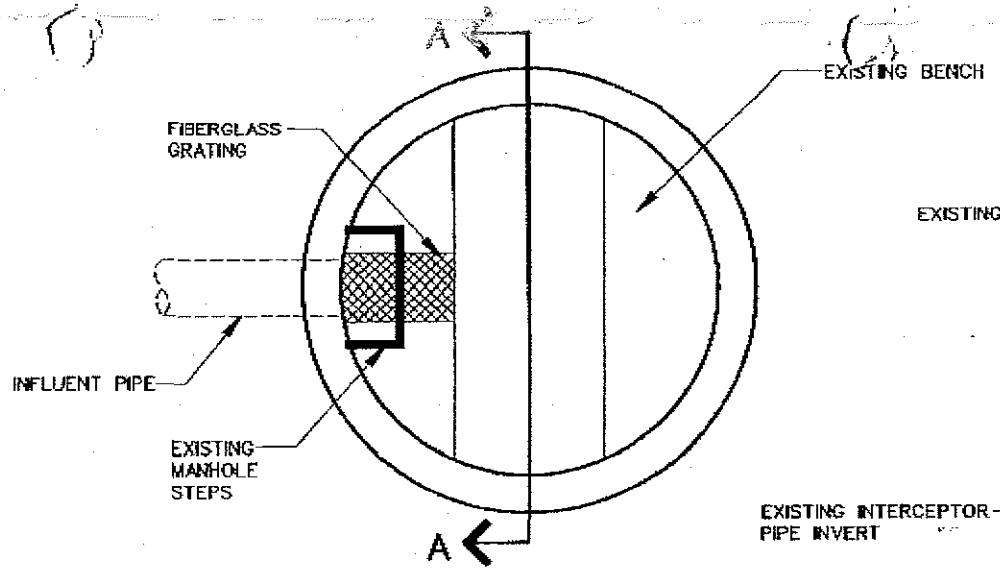

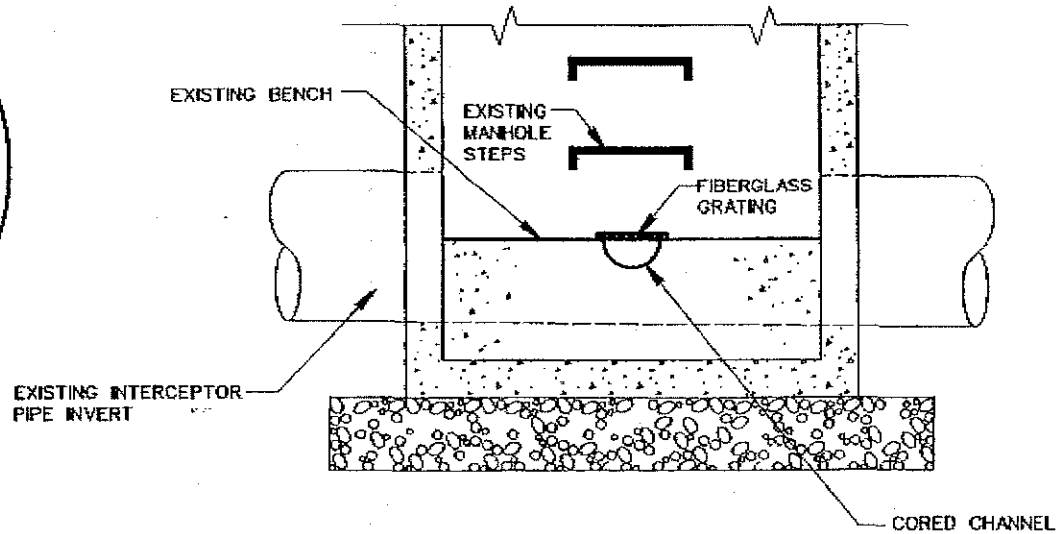

SECTION "A-A"

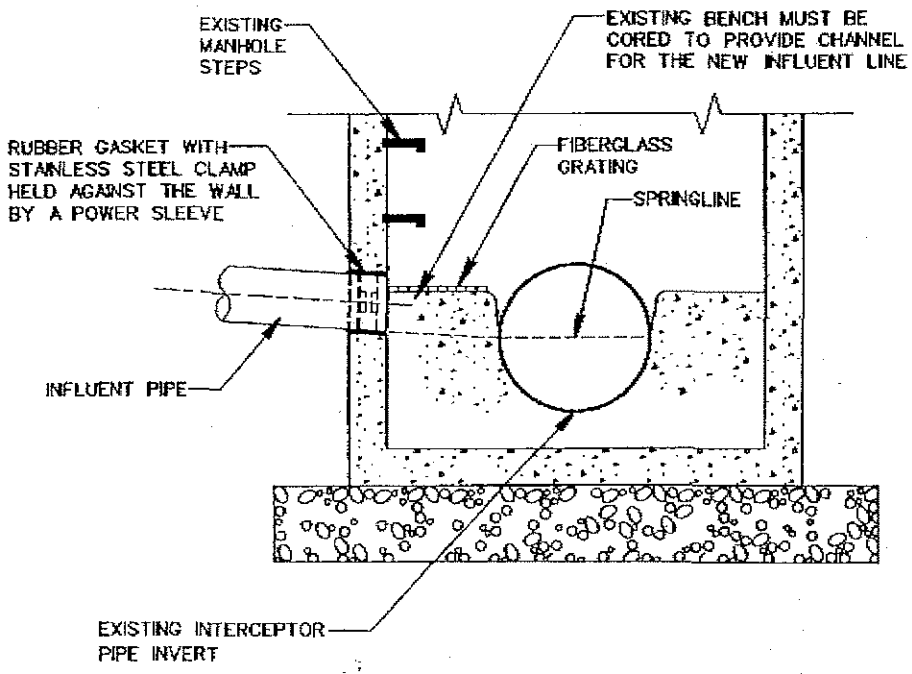

NOTES:

1) IF A STUB OR KNOCKOUT BULKHEAD HAS NOT BEEN PROVIDED AT THE OCEAN COUNTY UTILITIES AUTHORITY MANHOLE, THE CONNECTION MUST BE MADE WITH A CORING MACHINE AND A WATERTIGHT RUBBER GASKET SUITABLE FOR USE WITH SANITARY SEWAGE, USING POWER SLEEVE AND TAKE-UP CLAMPS. THE POWER SLEEVE AND TAKE-UP CLAMPS SHALL BE MADE OF STAINLESS STEEL AS MANUFACTURED BY PRESS SEAL GASKET CORPORATION. THE USE OF PNEUMATIC HAMMERS, CHIPPING GUNS, SLEDGE HAMMERS, OR OTHER MEANS OF PROVIDING A CONNECTION ARE NOT ACCEPTABLE.

2) IF THE CONNECTION IS MADE TO THE MANHOLE ON THE SAME SIDE ON WHICH THE MANHOLE STEPS ARE LOCATED, THEN A FIBERGLASS GRATING MUST BE INSTALLED OVER THE NEW CHANNEL SERVING THE CONNECTION. IF THE CHANNEL FOR THE NEW CONNECTION IS MADE BY CORING THROUGH THE EXISTING BENCH, THEN THE GRATING MUST BE SECURED TO THE EXISTING BENCH WITH SUITABLE 316 STAINLESS STEEL HOLD-DOWN CLIPS.

3) THE INFLUENT PIPE INVERT SHALL NOT BE LOWER THAN THE SPRINGLINE OF THE EXISTING INTERCEPTOR PIPE.

ALTERNATE 'A'
PRECAST MANHOLE CONNECTION DETAILS

REV. 1 11/18/1998
CAD FILE: DETAILS.dgn

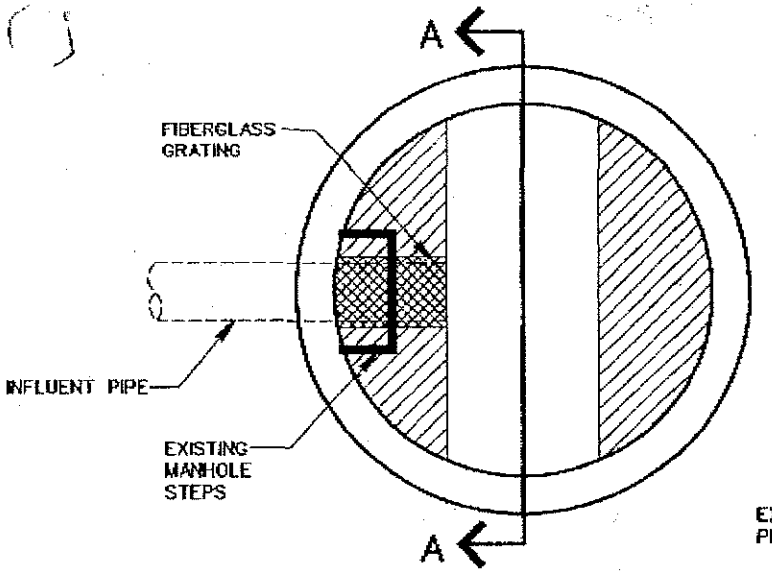

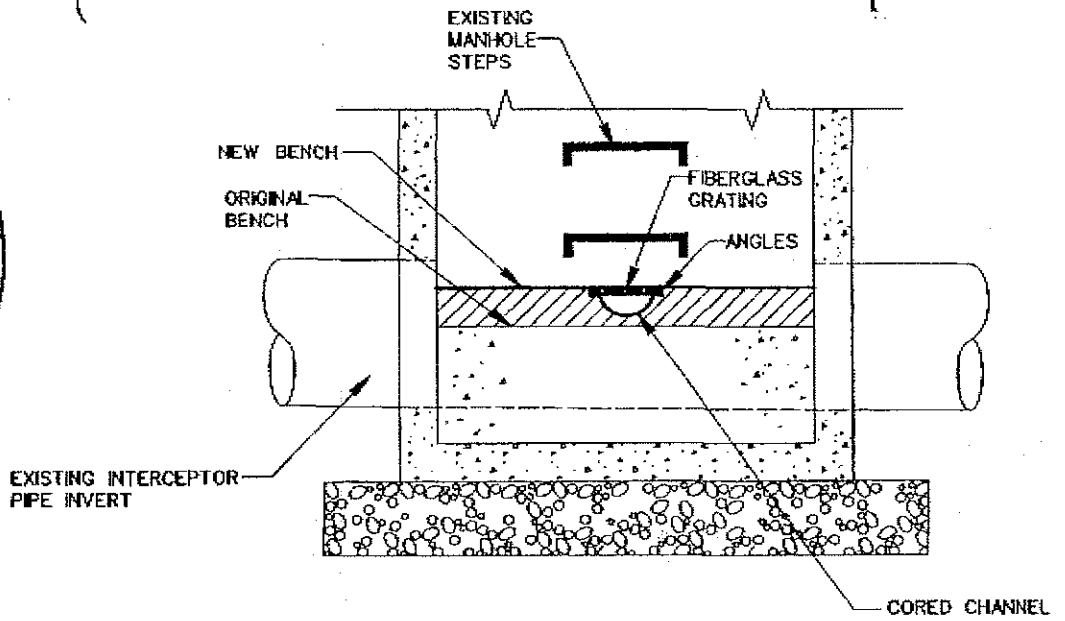

SECTION "A-A"

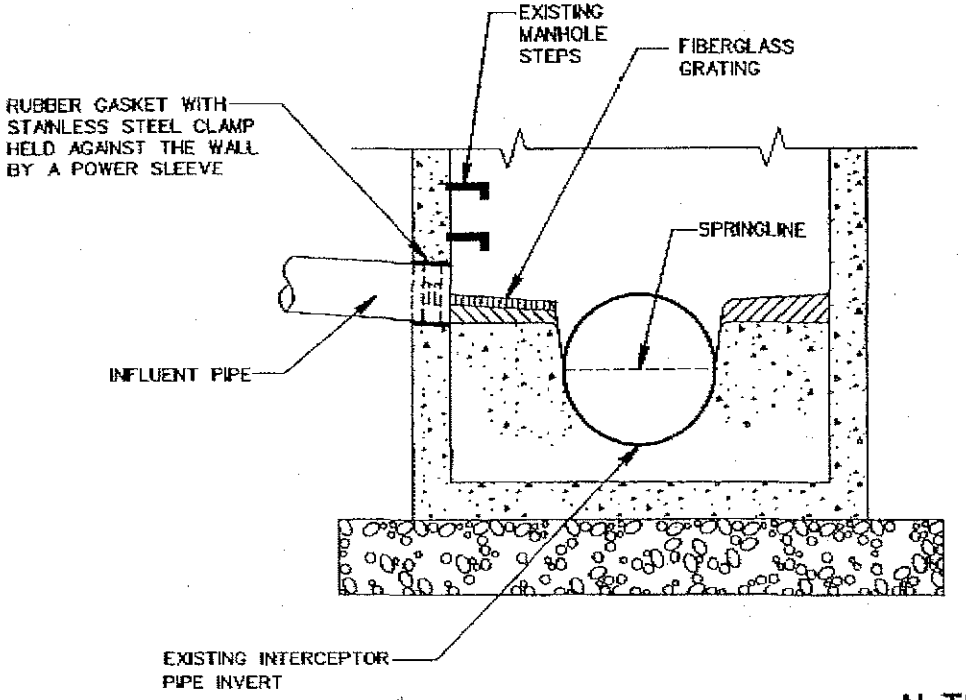

NOTES:

1) IF A STUB OR KNOCKOUT BULKHEAD HAS NOT BEEN PROVIDED AT THE OCEAN COUNTY UTILITIES AUTHORITY MANHOLE, THE CONNECTION MUST BE MADE WITH A CORING MACHINE AND A WATERTIGHT RUBBER GASKET SUITABLE FOR USE WITH SANITARY SEWAGE, USING POWER SLEEVE AND TAKE-UP CLAMPS. THE POWER SLEEVE AND TAKE-UP CLAMPS SHALL BE MADE OF STAINLESS STEEL AS MANUFACTURED BY PRESS SEAL GASKET CORPORATION. THE USE OF PNEUMATIC HAMMERS, CHIPPING GUNS, SLEDGE HAMMERS, OR OTHER MEANS OF PROVIDING A CONNECTION ARE NOT ACCEPTABLE.

2) IF THE CONNECTION IS MADE TO THE MANHOLE ON THE SAME SIDE ON WHICH THE MANHOLE STEPS ARE LOCATED, THEN A FIBERGLASS GRATING MUST BE INSTALLED OVER THE NEW CHANNEL SERVING THE CONNECTION. IF THE CHANNEL FOR THE NEW CONNECTION IS MADE BY BUILDING UP THE EXISTING BENCH, THE GRATING MUST BE INSTALLED SUCH THAT ITS TOP IS FLUSH WITH THE TOP OF THE NEW CONCRETE BENCH.

3) THE INFLUENT PIPE INVERT SHALL NOT BE LOWER THAN THE SPRINGLINE OF THE EXISTING INTERCEPTOR PIPE.

ALTERNATE 'B'

PRECAST MANHOLE CONNECTION DETAILS

REV. 1 11/8/1995
CAD FILE: b11193ne.dgn

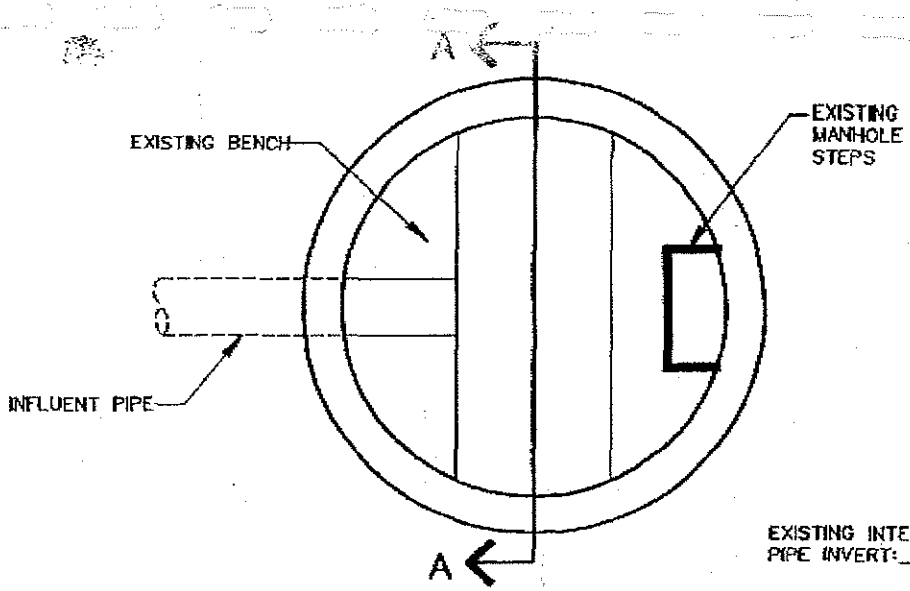

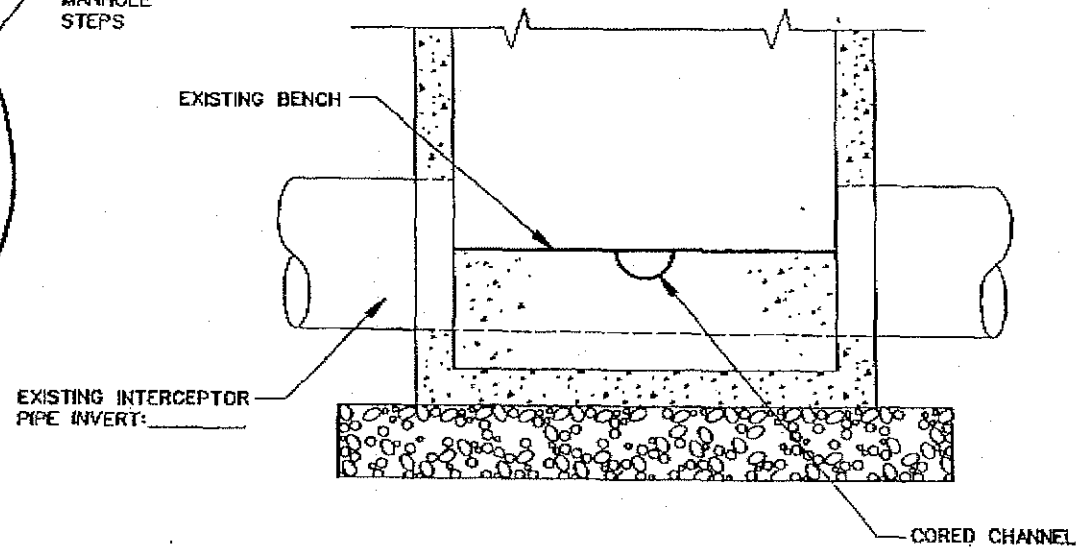

SECTION "A-A"

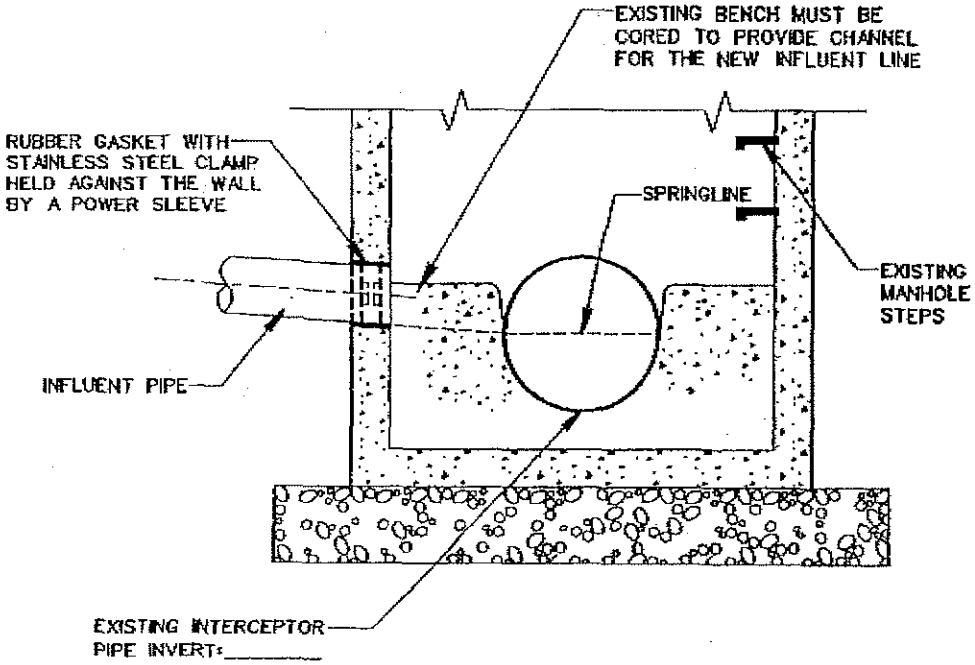

NOTES:

1) IF A STUB OR KNOCKOUT BULKHEAD HAS NOT BEEN PROVIDED AT THE OCEAN COUNTY UTILITIES AUTHORITY MANHOLE, THE CONNECTION MUST BE MADE WITH A CORING MACHINE AND A WATERTIGHT RUBBER GASKET SUITABLE FOR USE WITH SANITARY SEWAGE, USING POWER SLEEVE AND TAKE-UP CLAMPS. THE POWER SLEEVE AND TAKE-UP CLAMPS SHALL BE MADE OF STAINLESS STEEL AS MANUFACTURED BY PRESS SEAL GASKET CORPORATION. THE USE OF PNEUMATIC HAMMERS, CHIPPING GUNS, SLEDGE HAMMERS, OR OTHER MEANS OF PROVIDING A CONNECTION ARE NOT ACCEPTABLE.

2) THE CHANNEL FOR THE NEW CONNECTION MUST BE MADE BY CORING THROUGH THE EXISTING BENCH.

3) THE INFLUENT PIPE INVERT SHALL NOT BE LOWER THAN THE SPRINGLINE OF THE EXISTING INTERCEPTOR PIPE.

ALTERNATE 'C'

PRECAST MANHOLE CONNECTION DETAILS

REV.: 11/8/1996
CAD FILE: b11ttdrw.dgn

DESIGN STANDARDS FOR CONNECTIONS/DROP CONNECTIONS TO OCUA INTERCEPTORS/MANHOLES

Any project proposing a direct connection to the OCUA interceptor system must be designed in accordance with the requirements presented below.

1. A connection can only be made to a manhole on the OCUA system. A dog house manhole or a direct connection to the interceptor will not be permitted.

2. A connection made to any manhole must generally be at the manhole bench.

3. If a drop connection is approved only an inside drop connection will be allowed. A drop connection will not be permitted in manholes less than five (5) feet in diameter or tee type manholes.

4. The minimum diameter for a connection is 8 inches.

5. Only one drop connection will be permitted in a manhole.

6. The maximum diameter of any drop connection will be 12 inches, it may be less depending on the manhole diameter, location (at bends), step location, etc.

7. The maximum height of any inside drop from the interceptor invert shall be 6 feet.

8. In manholes on straight lines, the connection must be made at right angles to the flow.

9. In manholes at bends, the connection must be oriented so its discharge is at right angles or in the direction of the existing flow.

10. Three hundred feet of gravity sewer must precede force main connections to a manhole.

11. Connections serving a single dwelling must discharge to a separate manhole before it connects to an OCUA manhole.

12. The distance between the two manholes referenced in item 11 must be a minimum of 8 feet at the pipe joining the manholes when the connection is in a roadway. When the connection is in an easement the manhole must be located outside the easement.

13. A separate detail must be included in the plans showing the specific features of the manhole to which the connection is to be made.

These requirements will be supplemented with manhole connection details and written specifications for the connection. The applicant's engineer should contact the OCUA to obtain this supplemental information.

To: Jim McGoldrick (Schoor DePalma)
FROM: Nick Otten (OCUA)

THE OCEAN COUNTY UTILITIES AUTHORITY

Construction Requirements for Direct Connection to OCUA Interceptors

The following requirements must be shown on the contract drawings for any project which will be connected to an Ocean County Utilities Authority interceptor:

a. During installation of the gravity sanitary sewer, the contractor shall allow no debris to enter the Ocean County Utilities Authority's interceptor and no flushing of the collection system into the interceptor will be permitted.

b. The Ocean County Utilities Authority shall have the final say as to the approval or disapproval of any work done on the interceptor by the contractor when making the connection. All work on the connection shall be done in the presence of an Ocean County Utilities Authority inspector.

c. The contractor shall furnish the Ocean County Utilities Authority with copies of his insurance certificates for the job, naming the Authority as an insured party. The certificate must be furnished to the Authority before any connection will be allowed to the interceptor.

d. Any settlement occurring over the connection made to the Authority's interceptor will be the responsibility of the contractor.

e. The contractor shall provide the Ocean County Utilities Authority's Engineering Department with at least 48 hours notice prior to any work being done on the connection. The Engineering Department can be reached at (732) 269-4500. No work on the interceptor shall be covered until it has been approved by the Ocean County Utilities Authority.

f. If a stub or knockout bulkhead has not been provided at the Ocean County Utilities Authority manhole, the connection must be made with a coring machine and a watertight rubber gasket suitable for use with sanitary sewage, using a power expansion sleeve and take-up clamps. The power sleeve and take-up clamps shall be made of stainless steel as manufactured by Press Seal Gasket Corporation. The contractor may be required to grout the opening between the gasket and the manhole using non-shrink grout. The use of pneumatic hammers, chipping guns, sledge hammers, or other means of providing a connection are not acceptable to the Ocean County Utilities Authority.

It will be the responsibility of the Participant's or developer's contractor to fully comply with the above requirements. Under New Jersey Statutes (N.J.S.A.2A:122-5) any person who unlawfully breaks into, makes connection with, interferes with, or willfully damages such facilities will be guilty of a misdemeanor.

Tim, Seaside Park should* be able to connect to the OCUA's manholes from:
C1-1A, MH 15-4
to C1-1A, MH 11-4
& C1-1A, MH 17-1 & MH 17-2

1/2003

*needs our/approval/inspection req'd

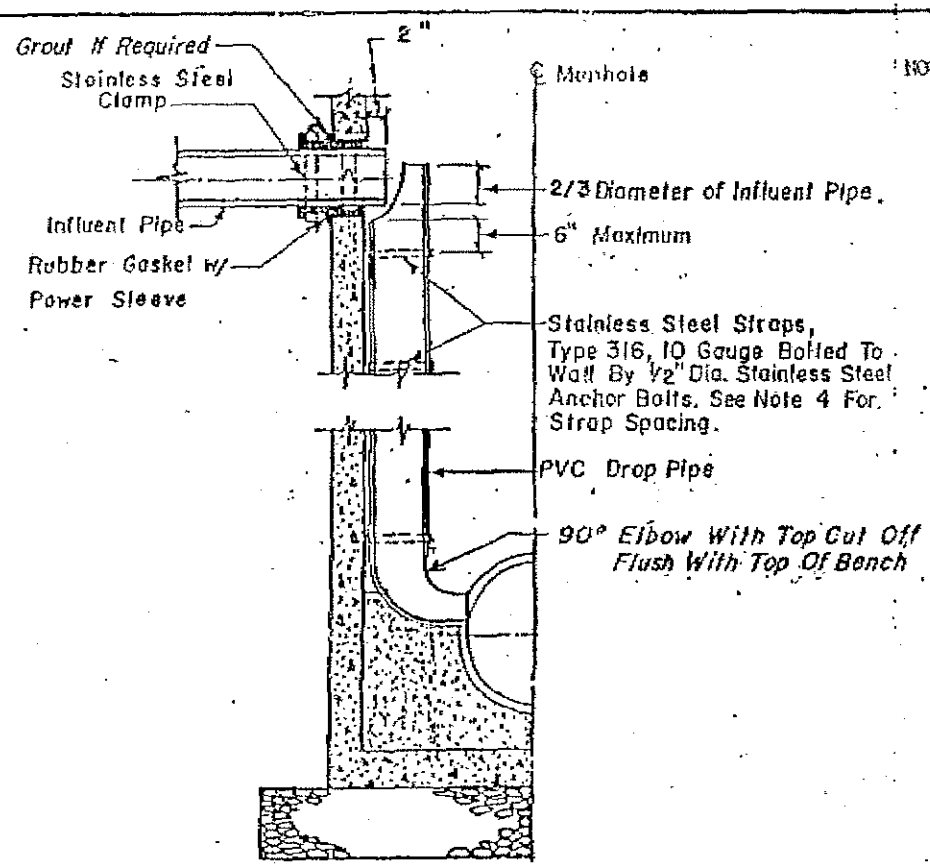

TYPICAL DROP CONNECTION SECTION

THE OCEAN COUNTY UTILITIES AUTHORITY

OCEAN COUNTY, NEW JERSEY

NOTES:

1) Nominal diameter of PVC drop section to be equal to the influent pipe I.D.

2) All joints on the drop section to be of the rubber gasket or friction type (solvent cement joints prohibited) to facilitate removal and/or replacement.

3) In the construction of the 90° elbow the contractor shall have the option of either chipping the bench to provide a channel for the 90° elbow or laying the elbow flush on top of the bench and build up all benches in the manhole to the spring line of the elbow. In either case the top half of the 90° elbow shall be cut off so that the spring-line of the elbow is at the same elevation as the top of the bench.

4) Stainless steel straps to be bolted to manhole wall in such a manner as to allow for future removal. First strap to be placed within a maximum distance of 6-inches below the inlet pipe invert. Remaining straps to be of 3-0" on centers with a minimum of three straps per drop.

5) If a stub or knockout bulkhead has not been provided at The Ocean County Utilities Authority manhole, the connection must be made with a coring machine and a watertight rubber gasket suitable for use with sanitary sewage, using a power sleeve and take-up clamps. The power sleeve and take-up clamps shall be made of stainless steel as manufactured by Press Seal Gasket Corporation. The use of pnuematic hammers, chipping guns, sledge hammers, or other means of providing a connection are not acceptable to The Ocean County Utilities Authority.

6) Max. drop connection to be 12".

B.T. 7/85
D.A. 8/89

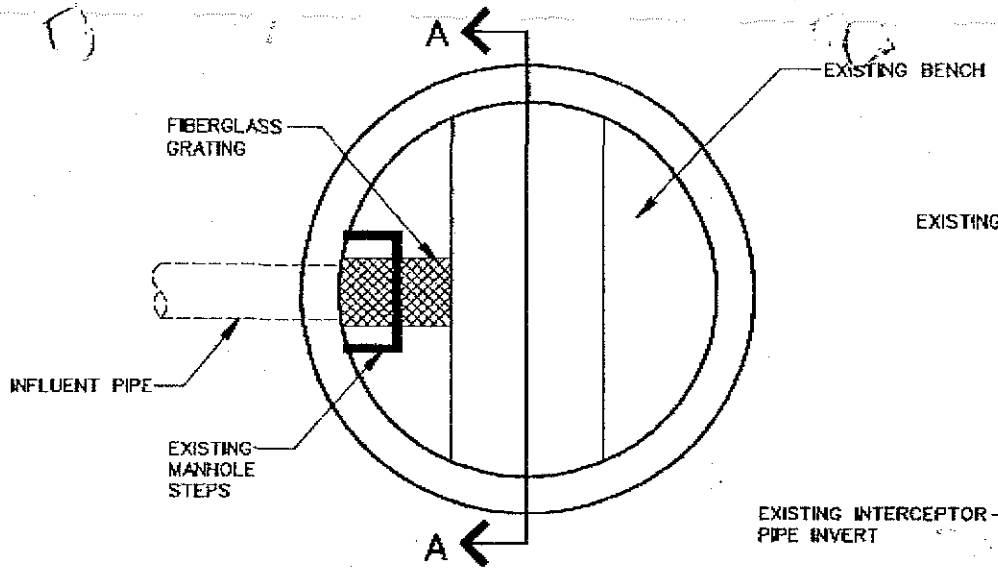

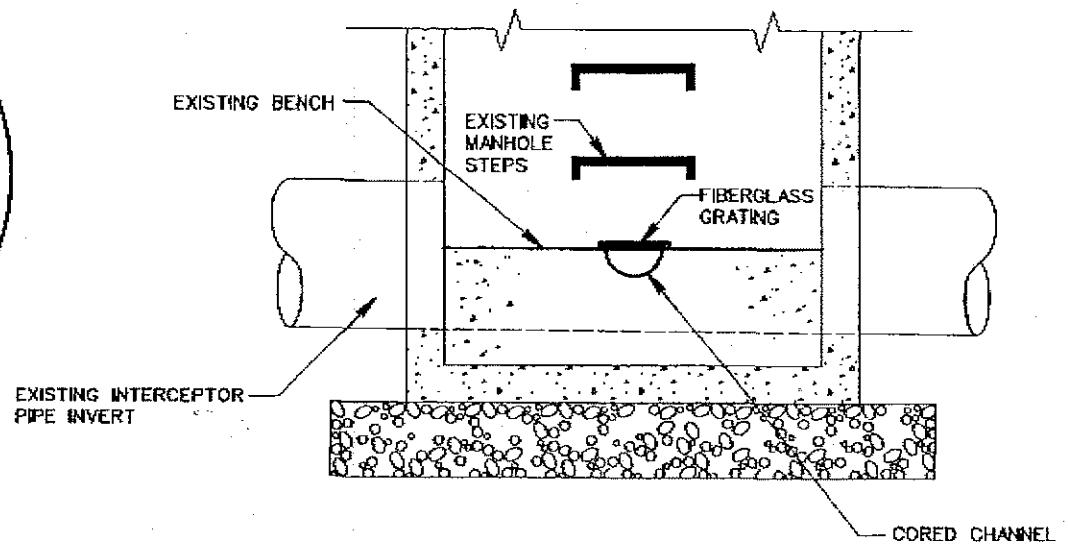

SECTION "A-A"

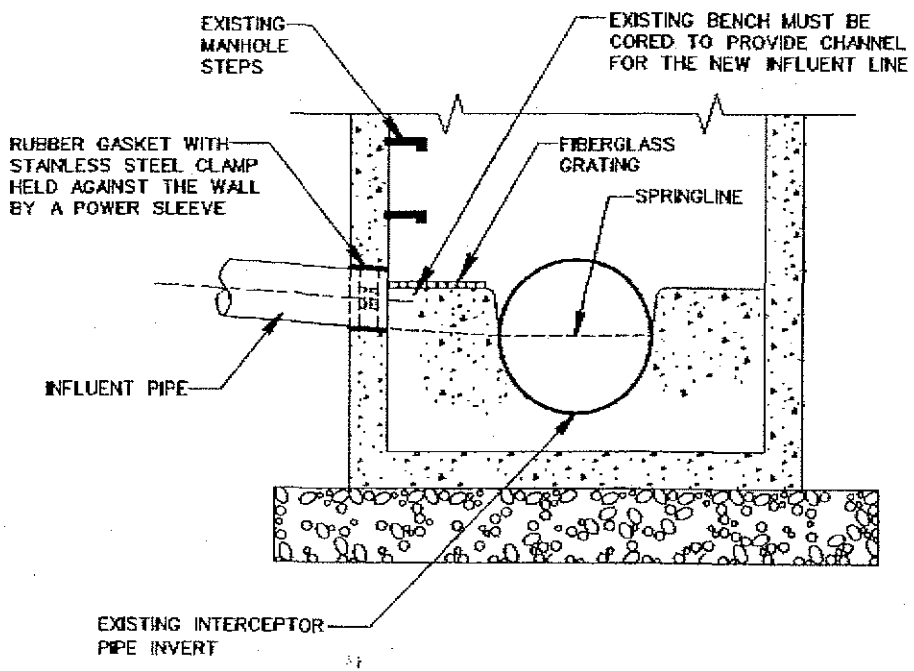

NOTES:

1) IF A STUB OR KNOCKOUT BULKHEAD HAS NOT BEEN PROVIDED AT THE OCEAN COUNTY UTILITIES AUTHORITY MANHOLE, THE CONNECTION MUST BE MADE WITH A CORING MACHINE AND A WATERTIGHT RUBBER GASKET SUITABLE FOR USE WITH SANITARY SEWAGE, USING POWER SLEEVE AND TAKE-UP CLAMPS. THE POWER SLEEVE AND TAKE-UP CLAMPS SHALL BE MADE OF STAINLESS STEEL AS MANUFACTURED BY PRESS SEAL GASKET CORPORATION. THE USE OF PNEUMATIC HAMMERS, CHIPPING GUNS, SLEDGE HAMMERS, OR OTHER MEANS OF PROVIDING A CONNECTION ARE NOT ACCEPTABLE.

2) IF THE CONNECTION IS MADE TO THE MANHOLE ON THE SAME SIDE ON WHICH THE MANHOLE STEPS ARE LOCATED, THEN A FIBERGLASS GRATING MUST BE INSTALLED OVER THE NEW CHANNEL SERVING THE CONNECTION. IF THE CHANNEL FOR THE NEW CONNECTION IS MADE BY CORING THROUGH THE EXISTING BENCH, THEN THE GRATING MUST BE SECURED TO THE EXISTING BENCH WITH SUITABLE 316 STAINLESS STEEL HOLD-DOWN CLIPS.

3) THE INFLUENT PIPE INVERT SHALL NOT BE LOWER THAN THE SPRINGLINE OF THE EXISTING INTERCEPTOR PIPE.

ALTERNATE 'A'

PRECAST MANHOLE CONNECTION DETAILS

REV.: 11/8/1993
CAD FILE: [illegible]

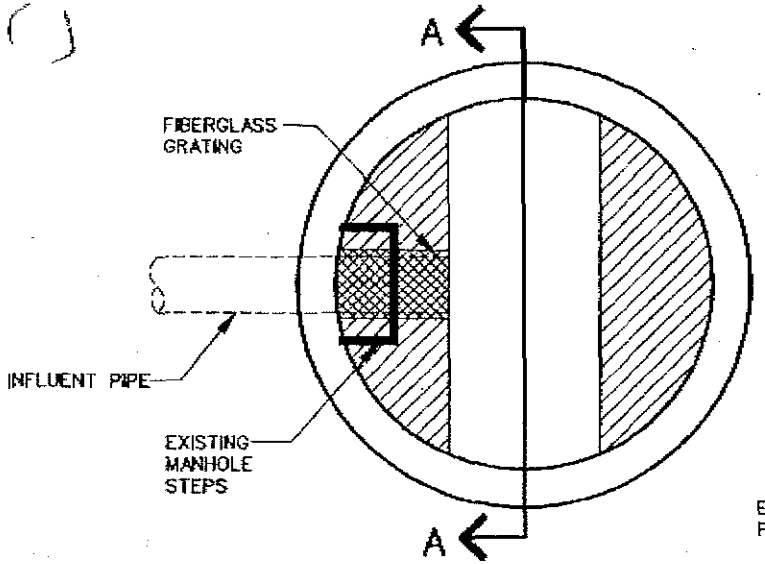

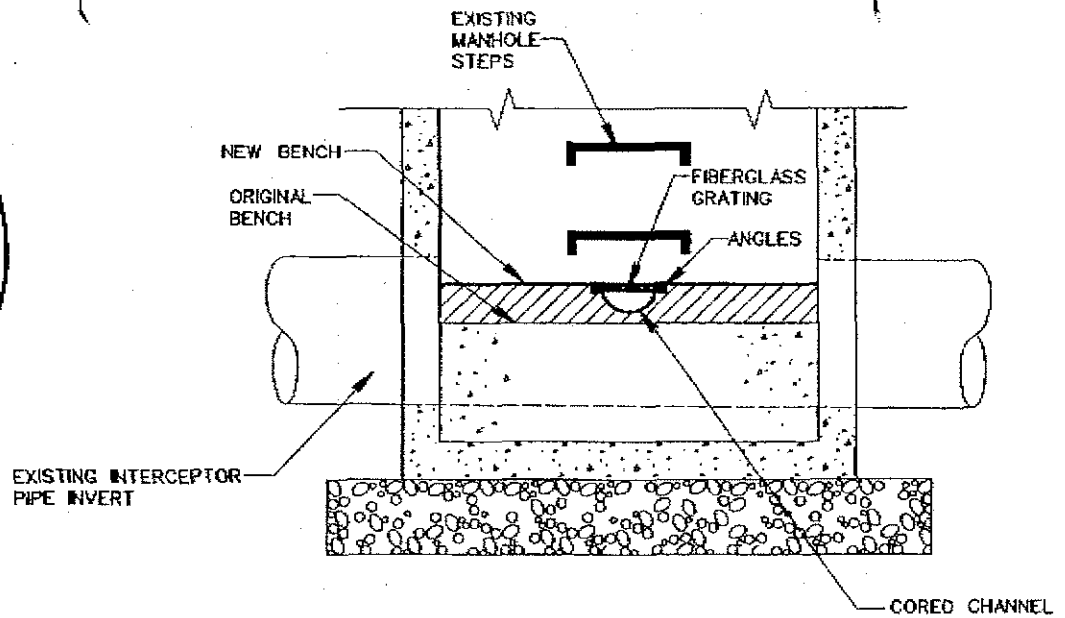

SECTION "A-A"

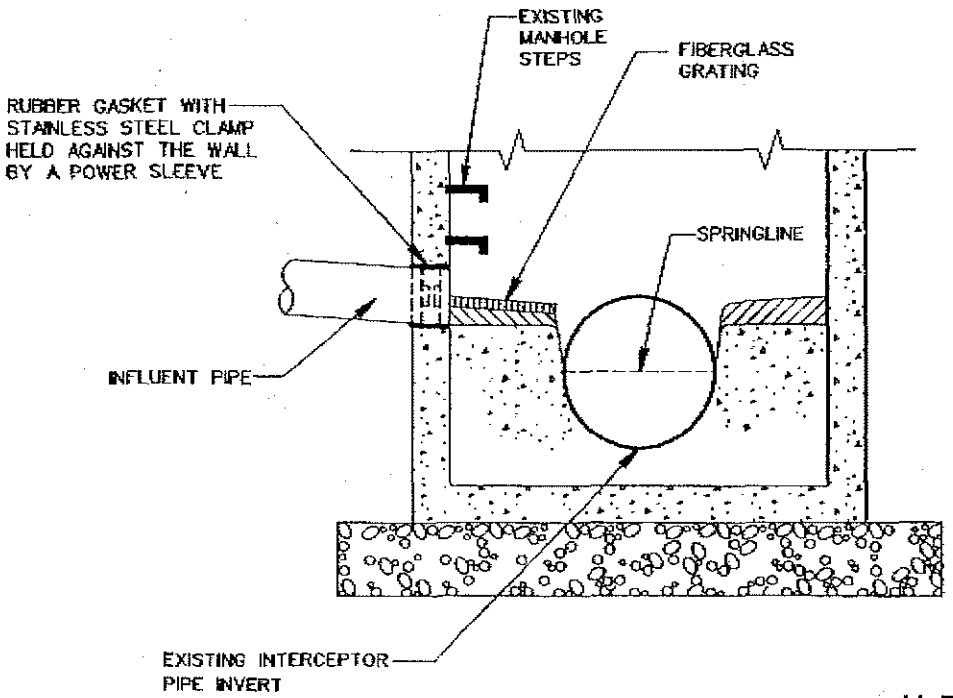

NOTES:

1) IF A STUB OR KNOCKOUT BULKHEAD HAS NOT BEEN PROVIDED AT THE OCEAN COUNTY UTILITIES AUTHORITY MANHOLE, THE CONNECTION MUST BE MADE WITH A CORING MACHINE AND A WATERTIGHT RUBBER GASKET SUITABLE FOR USE WITH SANITARY SEWAGE, USING POWER SLEEVE AND TAKE-UP CLAMPS. THE POWER SLEEVE AND TAKE-UP CLAMPS SHALL BE MADE OF STAINLESS STEEL AS MANUFACTURED BY PRESS SEAL GASKET CORPORATION. THE USE OF PNEUMATIC HAMMERS, CHIPPING GUNS, SLEDGE HAMMERS, OR OTHER MEANS OF PROVIDING A CONNECTION ARE NOT ACCEPTABLE.

2) IF THE CONNECTION IS MADE TO THE MANHOLE ON THE SAME SIDE ON WHICH THE MANHOLE STEPS ARE LOCATED, THEN A FIBERGLASS GRATING MUST BE INSTALLED OVER THE NEW CHANNEL SERVING THE CONNECTION. IF THE CHANNEL FOR THE NEW CONNECTION IS MADE BY BUILDING UP THE EXISTING BENCH, THE GRATING MUST BE INSTALLED SUCH THAT ITS TOP IS FLUSH WITH THE TOP OF THE NEW CONCRETE BENCH.

3) THE INFLUENT PIPE INVERT SHALL NOT BE LOWER THAN THE SPRINGLINE OF THE EXISTING INTERCEPTOR PIPE.

ALTERNATE 'B'

PRECAST MANHOLE CONNECTION DETAILS

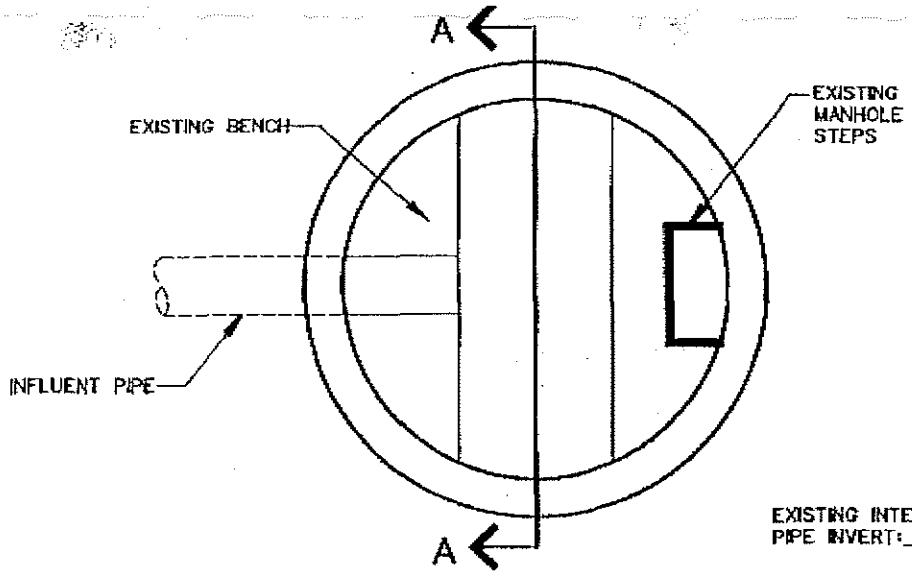

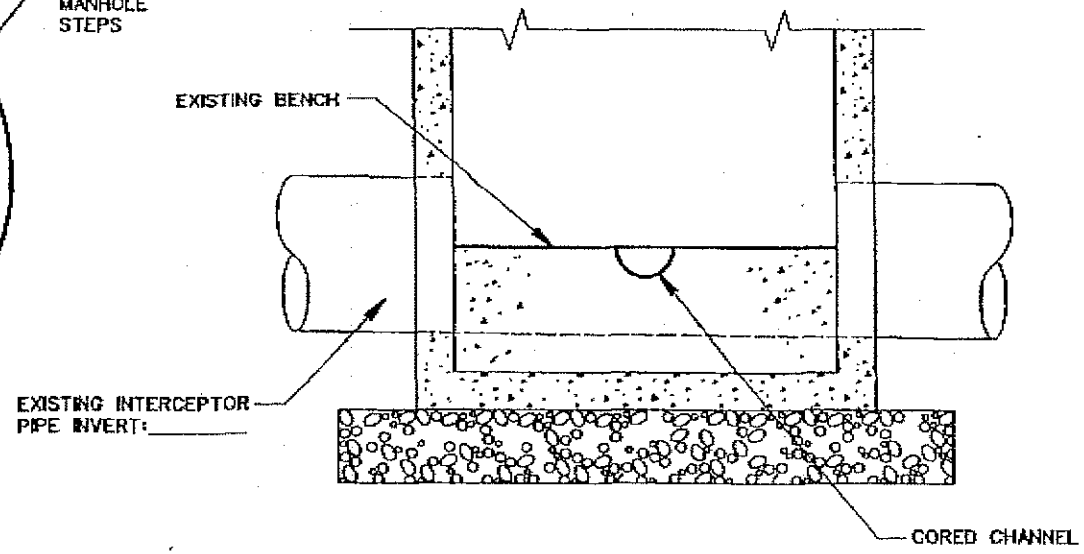

SECTION "A-A"

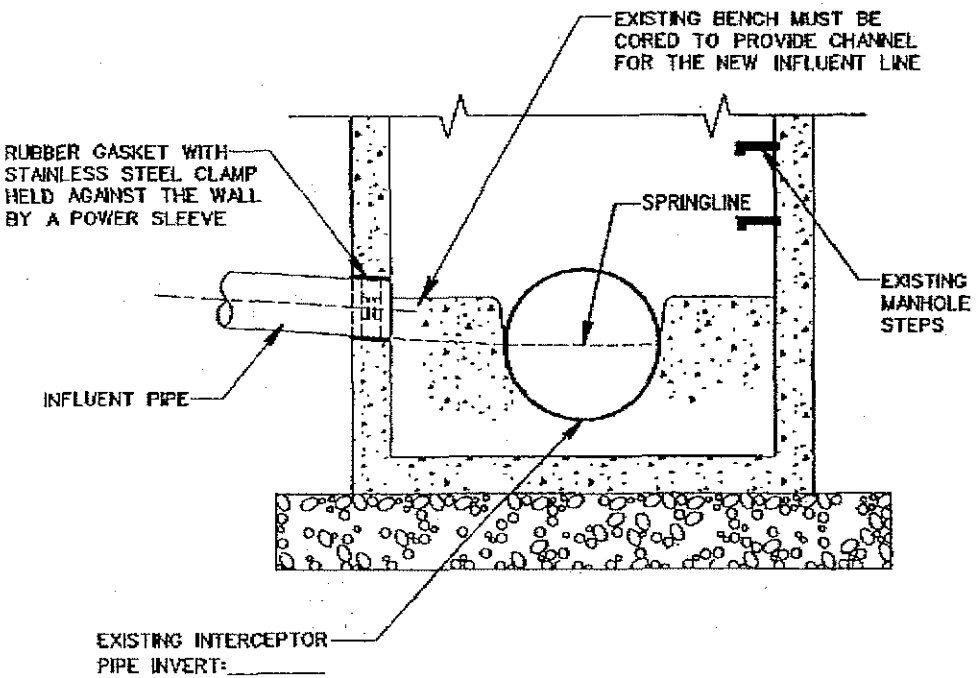

NOTES:

1) IF A STUB OR KNOCKOUT BULKHEAD HAS NOT BEEN PROVIDED AT THE OCEAN COUNTY UTILITIES AUTHORITY MANHOLE, THE CONNECTION MUST BE MADE WITH A CORING MACHINE AND A WATERTIGHT RUBBER GASKET SUITABLE FOR USE WITH SANITARY SEWAGE, USING POWER SLEEVE AND TAKE-UP CLAMPS. THE POWER SLEEVE AND TAKE-UP CLAMPS SHALL BE MADE OF STAINLESS STEEL AS MANUFACTURED BY PRESS SEAL GASKET CORPORATION. THE USE OF PNEUMATIC HAMMERS, CHIPPING GUNS, SLEDGE HAMMERS, OR OTHER MEANS OF PROVIDING A CONNECTION ARE NOT ACCEPTABLE.

2) THE CHANNEL FOR THE NEW CONNECTION MUST BE MADE BY CORING THROUGH THE EXISTING BENCH.

3) THE INFLUENT PIPE INVERT SHALL NOT BE LOWER THAN THE SPRINGLINE OF THE EXISTING INTERCEPTOR PIPE.

ALTERNATE 'C'

PRECAST MANHOLE CONNECTION DETAILS

APPENDIX J

NEW JERSEY DEPARTMENT OF TRANSPORTATION CONCRETE ROADWAY REPAIR DETAILS

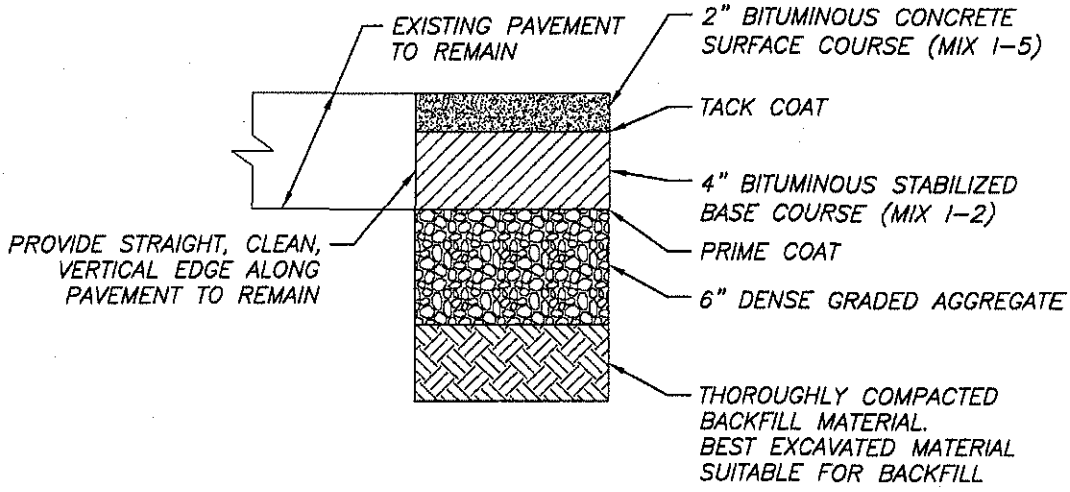

SHOULDER PAVEMENT RESTORATION
N.J.D.O.T. HIGHWAY

N.T.S.

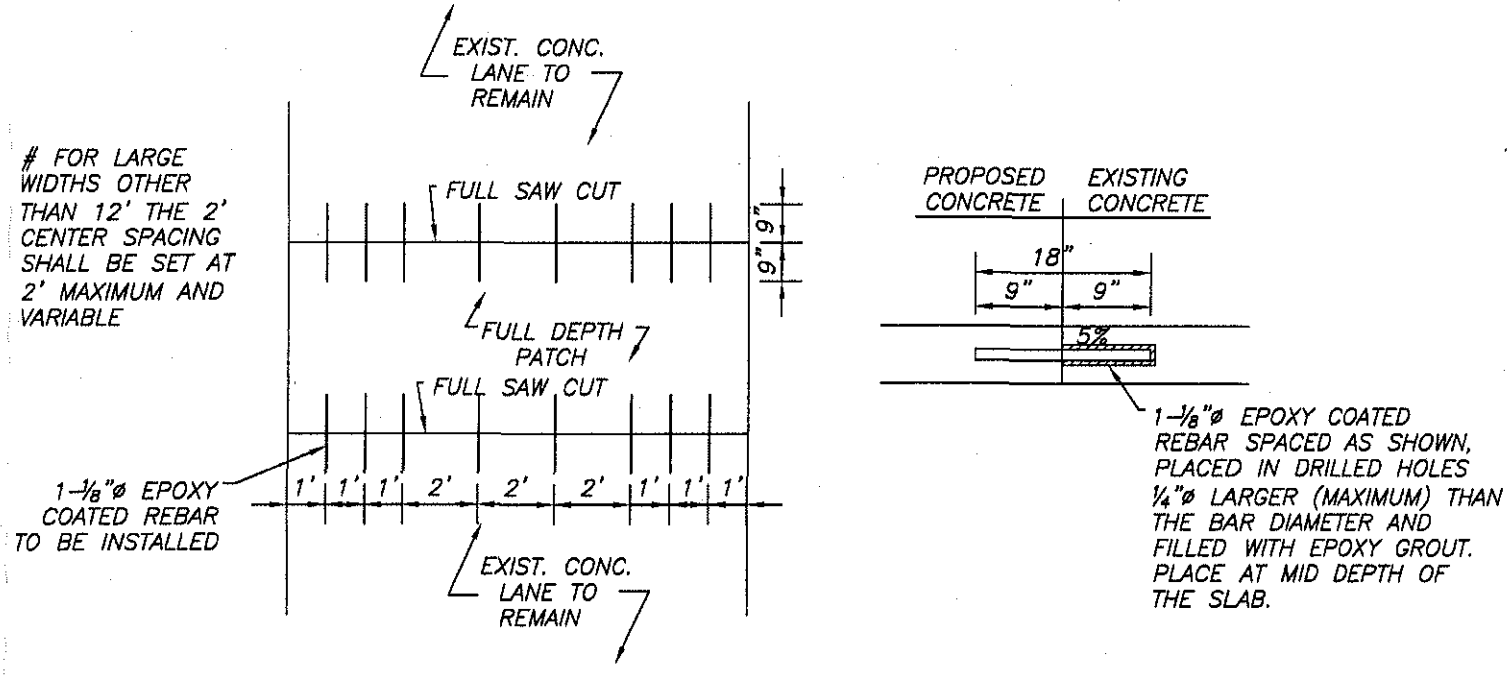

TRANVERSE JOINT TIE IN REINFORCED CONCRETE SURFACE COURSE RECONSTRUCTION

N.T.S.

SCHOOR DEPALMA
Engineers and Consultants
Cert. Of Authorization 24GA27926200
200 STATE HIGHWAY NINE
P.O. BOX 900 MANALAPAN, NJ 07726
TEL (732)577-9000 FAX (732)577-9888

DATE	REVISIONS	ORDER NO.

SCALE	DATE	DRAWN BY	DES. BY	FILE NO.	CHECKED BY
AS NOTED	10/27/2006	MLN		060366102	

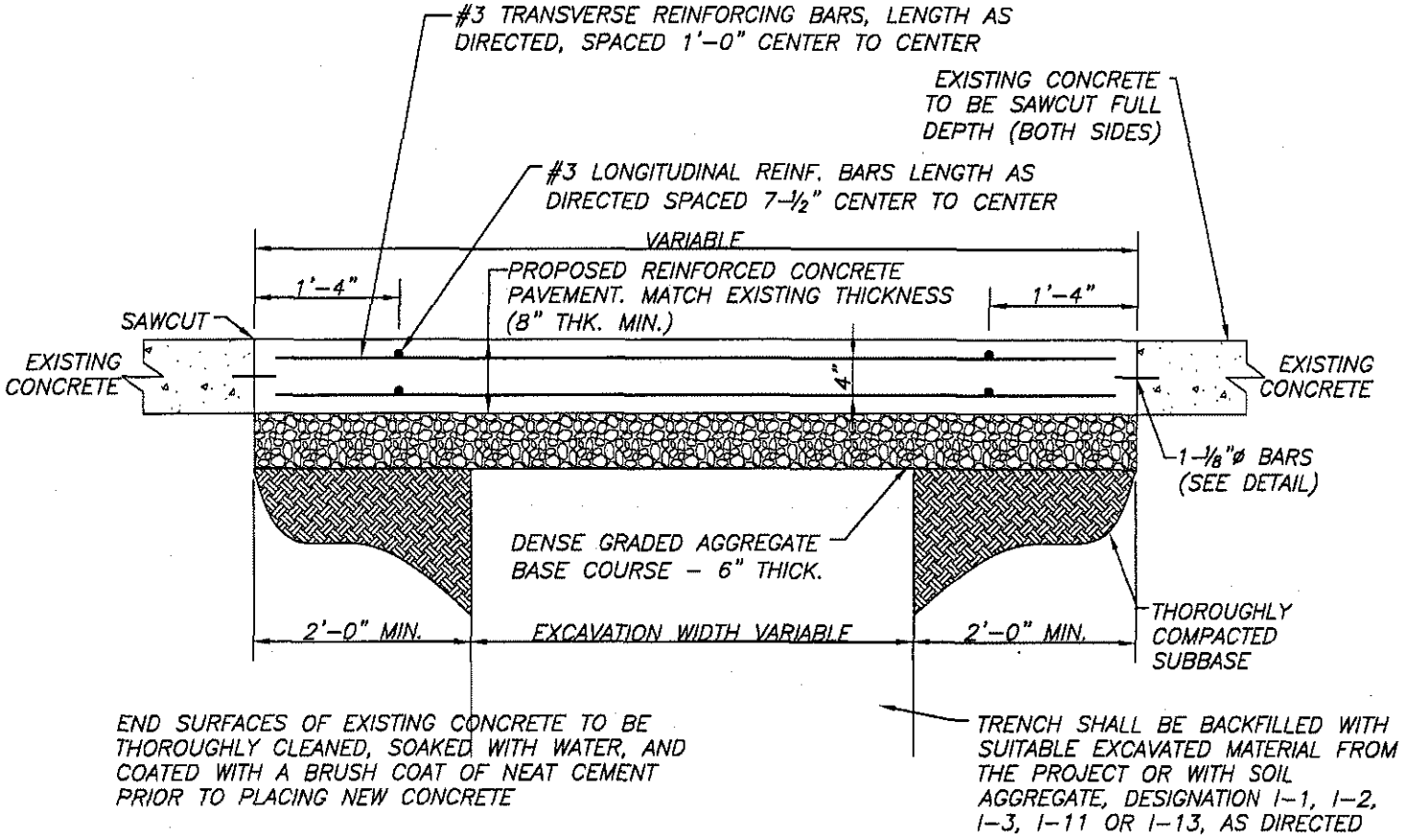

N.J.D.O.T. & COUNTY HIGHWAY REINFORCED CONCRETE SURFACE COURSE RECONSTRUCTION

N.T.S.

SCHOOR DEPALMA
Engineers and Consultants
Cert. Of Authorization 24GA27926200
200 STATE HIGHWAY NINE
P.O. BOX 900 MANALAPAN, NJ 07726
TEL (732)577-9000 FAX (732)577-9888

DATE	REVISIONS	ORDER NO.

SCALE	DATE	DRAWN BY	DES. BY	FILE NO.	CHECKED BY
AS NOTED	10/27/2006	MLN		060366102	

APPENDIX K

CAFRA - JURISDICTIONAL DETERMINATION

Jon S. Corzine
Governor

State of New Jersey
Department of Environmental Protection
Division of Land Use Regulation
P O Box 439
501 East State Street
Trenton, NJ 08625-0439
Fax: (609) 292-8115
www.state.nj.us/dep/landuse

Lisa P. Jackson
Commissioner

Ryan Merritt
Schoor DePalmer
200 State Hwy 9
POBox 900
Manalapan, New Jersey 07726-0900

November 3, 2006

Re: LURP File No.: 1527-06-0007.1 APD 060001
Name: Seaside Park Borough
Block: ROWs; Lot(s): ROWs
Address: Various ROWs in the Borough
Seaside Park Borough, Ocean County

Dear Ryan Merritt:

This letter is in response to your request for a jurisdictional determination as referenced above. Potentially applicable statutes include Waterfront Development Act (N.J.S.A. 12:5-3 et. seq.), Wetlands Act of 1970 (N.J.S.A. 13:9A-1 et. seq.) and the Coastal Area Facility Review Act, CAFRA, (N.J.S.A. 13:9-1 et. seq.). Based on a review of the information submitted including the site plans 1-3 of 3 entitled "**SANITARY SEWER – PHASES I, II AND III, SEASIDE PARK, FEASIBILITY STUDY / CONCEPTUAL PLAN, BOROUGH OF SEASIDE PARK, OCEAN COUNTY, NEW JERSEY**" and plan 1 of 1 entitled "**WATER DISTRIBUTION SYSTEM – PHASES I, II AND III, SEASIDE PARK, FEASIBILITY STUDY / CONCEPTUAL PLAN, BOROUGH OF SEASIDE PARK, OCEAN COUNTY, NEW JERSEY**", dated, respectively, September 22, 2006 and September 27, 2006 and prepared by Schoor DePalma, and a review of information as maintained on the Department's Geographic Information System the following statutes will apply:

(X) A Waterfront Development permit is not required.

Based on a review of the Coastal Wetlands Maps, the following determination is made:
(X) There are no mapped Coastal Wetlands on this site, therefore no permit is required.

Based on a review of the submitted documentation, the Coastal Area Facility Review Act, **CAFRA, is not applicable** as per Section 7:7-2.1(b)2 of the Coastal Permit Program Rules to the proposed replacement of potable water and sanitary sewer infrastructure with no increase in capacity within paved ROWs throughout the Borough.

This letter does not constitute a jurisdictional determination for the Freshwater Wetlands Protection Act Rules at N.J.A.C. 7:7A and the Flood Hazard Area Control Act Rules at N.J.A.C. 7:13-1.1 et seq. Assistance with the applicability of these statutes is available from this offices' Ocean County Region group which may be contacted at the above address.

This letter does not relieve the applicant of the responsibility of obtaining any other required State, Federal or local permits or approvals as required by law and is based on the information submitted in accordance with existing regulation. This determination shall be considered null and void if the submitted information is incorrect, site conditions or regulations change.

Should you have any questions regarding this determination, please contact me at the above address or via email: Evelyn.Hall@dep.state.nj.us. Requests for assistance must include the file number as found on each page of this determination.

Sincerely,

Evelyn M. Hall
Principal Environmental Specialist
Division of Land Use Regulation

c: Ocean County Region Supervisor, DLUR, NJDEP
Bureau of Enforcement, Toms River
Seaside Park Borough Construction Official

Adjudicatory Hearing Request Checklist and Tracking Form

I. Permit Decision or Other Department Decision Being Appealed:

_____

_____

Issuance Date of Decision Document | Document Number (If any)

II. Please provide Name, Address and Phone No. of:

Person Requesting Hearing	Name of Attorney (If applicable)
Address	Address
Phone No.	Phone No.

III. If you are the applicant or permittee, please include the following information with your hearing request:

A. The date you received the permit decision or other decision which you are appealing:
B. A copy of the decision document;
C. The findings of fact and conclusions of law you are appealing;
D. A statement as to whether or not you raised each legal and factual issue during the permit application process;
E. Suggested revised or alternative permit conditions;
F. An estimate of the time required for the hearing;
G. A request, if necessary, for a barrier-free hearing location for physically disabled persons;
H. A clear indication of any willingness to negotiate a settlement with the Department prior to the Department's processing of our hearing request to the Office of Administrative Law; and
I. This form completed; signed and dated with all of the information listed above, including attachment to:

1. New Jersey Department of Environmental Protection Office of Legal Affairs
   Attention: Adjudicatory Hearing Requests
   401 East State Street
   P.O. Box 402
   Trenton, NJ 08625-0402:

With a copy to:

2. New Jersey Department of Environmental Protection
   Land Use Regulation Program
   Attention: Director
   P.O. Box 439
   Trenton, NJ 08625-0439

Signature: _____ Date: _____

IV. If you are a person other than the applicant or permittee, please include the following information with your hearing request:

A. The date you or your agent received notice of the permit decision, and a copy of the permit decision:
B. Evidence that a copy of your hearing request has been delivered to the applicant for the permit decision which is the subject of your hearing request (e.g., certified mail return receipt);
C. A detailed statement of which findings of fact and/or conclusion of law you are challenging;
D. A description of our participation in any public hearings held in connection with the permit application and copies of any written comments you submitted;
E. Whether you claim a statutory or constitutional right to a hearing, and, if you claim such a right, a reference to the applicable statue or an explanation of how your interests are affected by the permit decision;
F. Suggested revised or alternative permit conditions;
G. An estimate of the time required for the hearing;
H. A request, if necessary, for a barrier-free hearing location for physically disabled persons;
I. A clear indication of any willingness to negotiate a settlement with the Department prior to the Department's processing of the hearing request to the Office of Administrative Law; and
J. This form completed, signed and dated with all the information listed above, including attachments to

1. New Jersey Department of Environmental Protection Office of Legal Affairs
   Attention: Adjudicatory Hearing Requests
   401 East State Street
   P.O. Box 402
   Trenton, NJ 08625-0402:

With a copy to:

2. New Jersey Department of Environmental Protection
   Land Use Regulation Program
   Attention: Director
   P.O. Box 439
   Trenton, NJ 08625-0439

Signature: _____ Date: _____

APPENDIX L

PHASE I - PROPOSED PROJECT SCHEDULE

BOROUGH OF SEASIDE PARK
FEASIBILITY STUDY / CONCEPTUAL PLAN
WATER DISTRIBUTION AND SANITARY SEWER IMPROVEMENTS
PRELIMINARY SCHEDULE - DESIGN AND BIDDING